TOWN OF HERNDON, VIRGINIA
ARCHITECTURAL REVIEW BOARD
WORK SESSION AGENDA
AUGUST 7, 2019
HERNDON MUNICIPAL CENTER
2nd floor, LARGE CONFERENCE ROOM
777 LYNN STREET
7:30 P.M.

CALL TO ORDER

1. Determination of Quorum

PUBLIC HEARINGS

2. **APPLICATION FOR A WALL OR WINDOW SIGN, ARB #19-29,** to consider an application to install two new wall signs for a tenant business located on the commercial building at 1040 Elden Street, Herndon, Virginia, located northeast of the intersection of Elden Street and Alabama Drive, southwest of the intersection of Elden Street and Locust Street and further identified as Fairfax County Tax Map 0161-02-0026B. The property is zoned CS, Commercial Services, and consists of 21,993 square feet of land. Owner/Applicant: Dulles Park Shopping Center, LLC c/o JBG Smith Properties. Applicant's Representative: James Sung, Signs To Go.

3. **APPLICATION FOR AN ALTERATION TO AN EXISTING STRUCTURE, ARB #19-30,** to consider an application to install new awnings for a tenant business on the commercial building located at 1040 Elden Street, Herndon, Virginia, located northeast of the intersection of Elden Street and Alabama Drive, southwest of the intersection of Elden Street and Locust Street and further identified as Fairfax County Tax Map 0161-02-0026B. The property is zoned CS, Commercial Services, and consists of 21,993 square feet of land. Owner/Applicant: Dulles Park Shopping Center, LLC c/o JBG Smith Properties. Applicant's Representative: James Sung, Signs To Go.

4. **APPLICATION FOR A WALL OR WINDOW SIGN, ARB #19-31,** to consider an application to install new tenant business signs on the multi-tenant commercial building located at 360 Herndon Parkway, Suite 2150, Herndon, Virginia, located on the southwest corner of the intersection of Herndon Parkway and Grove Street, and further identified as Fairfax County Tax Map 0171-06-F4. The property is zoned O&LI, Office and Light Industrial, and consists of 226,639 square feet of land. Owner/Applicant: North Washington, LLC c/o Borger Management, Inc. Applicant's Representative: Anthony Bashorun, Signorama.

5. **APPLICATION FOR AN AMENDMENT TO AN APPROVED APPLICATION, ARB #19-32,** to consider an application to revise approved façade materials and treatments on the commercial building at 533 Herndon Parkway, Herndon, Virginia, located south of the intersection of Herndon Parkway and Exchange Place, and further identified as Fairfax County Tax Map 0164-10-0004. The property is zoned PD-TOC, Planned Development – Transit-Oriented Core, and consists of 190, 184 square feet of land. Owner/Applicant: CMP I Herndon Owner, LLC. Applicant's Representative: Dan Norwood, Beacon Bay Project Management.

COMMENTS

6. Comments from the Staff Members

7. Comments from the Board Members

ADJOURNMENT

TOWN OF Herndon VIRGINIA

STAFF REPORT
Architectural Review Board
August 2, 2019

Case Number & Type: ARB #19-29; Wall Signs
Case Summary: Install new business signs on an exterior wall of an existing single tenant commercial building
Case Location: 1040 Elden Street, Dulles Park Shopping Center

Location Map

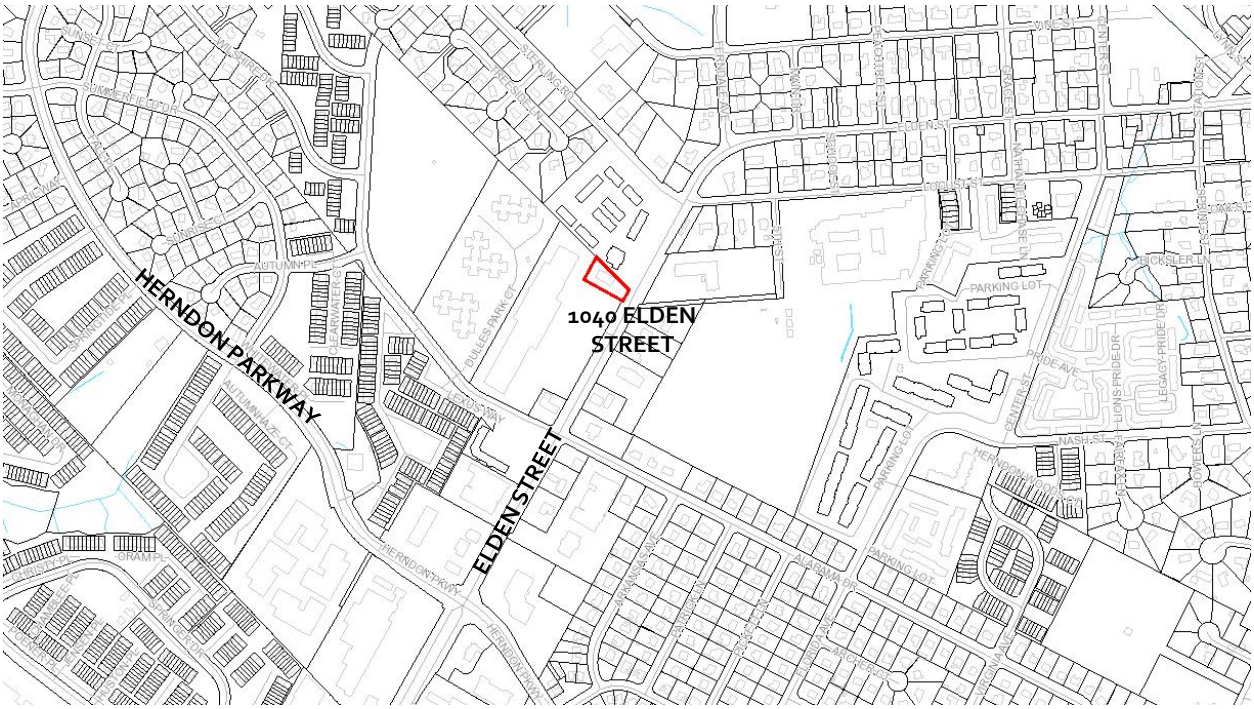

Property Information

Owner / Applicant:	Dulles Park Shopping Center, LLC TR c/o JBG Smith Properties		
Representative:	James Sung, Sign To Go		
Business/Organization:	Quickway Japanese Hibachi		
Property Use:	Commercial retail		
Zoning District:	CS – Commercial Services		
Adjacent Zoning:	**North:** CS – Commercial Services/CO – Commercial Office **South:** CS – Commercial Services	**East:** CS – Commercial Services **West:** CS – Commercial Services	
Associated Cases:	ARB #19-30		
Building Type(s):	One-story, multi-tenant commercial	**Date of Construction:**	1997
Architectural Style(s):	Post-modern, typical suburban commercial / retail shopping center design		

Exterior Material(s):	Composite – CMU structure, brick veneer with stucco or EIFS finishes, typical retail/commercial storefront windows and doors
Neighborhood Design Profile:	Existing commercial and office

Case Details

Case Description:

The applicant is proposing to install two new commercial business signs for a *Quickway Japanese Hibachi* food service business. The application proposes to utilize two sign panels. One of the panels is located on the south elevation, which is the location of the business's entrance. The second panel is located on the east elevation facing Elden Street. The south elevation of the unit is visible to pedestrians and vehicles traveling north on Elden Street.

On the south facing façade, one sign panel will contain two lines of text, one with the *Quickway* business name in a white brush script lettering with 3/16" acrylic faces approximately 2'-1" X 12'-0" in size and constructed of 4" deep black aluminum channel letters, and the second line of text with the words *Japanese Hibachi* in a modern, sans serif font type in block letters with 3/16" white acrylic faces approximately 7" X 11'-6" in size and constructed in the same manner as the first text line. The channel letters will have internally mounted white LED lights to illuminate the lettering. The aluminum channel letters will be mounted on a 2" deep, 0.2" thick aluminum rectangular tube flush mounted to the exterior wall and will be painted maroon with a black trim to match the corporate colors of this business. The overall sign dimensions are approximately 3'-5 ½" X 12' -7". The sign will be place at approximately 17'-6" above ground level at its highest point.

The second sign panel on the east façade along Elden Street will have a slightly smaller sign with *Quickway* business name sized at approximately 1'-9" X 9'-0" and the second line of text with the *Japanese Hibachi* text sized at 6" X 9'-7". The sign, lettering and mounting will be identical to the sign on the south façade with overall sign dimensions of approximately 2'-11" X 9'-10". The east façade sign will be mounted at approximately 16'-5" above ground level.

Using the method for calculating the wall sign area(s) found in the Town's Zoning Ordinance, the signs on the south and east elevations will have overall sign areas of 43.5 square feet and 28.6 square feet, totaling 72.1 square feet of sign area (Attachments #1, #2, and #3).

Case Background:

This property has been the subject of numerous ARB cases and administrative approvals for tenant signage over time as businesses have changed in the various tenant spaces. The current proposed signs do not meet design standards as are required by the approved master sign plan for this property, thus requiring review and approval from the Architectural Review Board. ARB #19-29 is coupled with ARB #19-30 for the same tenant

space. ARB #19-30, will consider new awnings over the storefronts on the south and east elevations for this business.

Applicable Design Guidelines & Standards:

- Town Zoning Ordinance, Section, 78-140.6. - General standards for all signs
- Town Zoning Ordinance Section 78-141.4. - Sign standards for commercial districts
- Town Code of Ordinances, Section 58-96 Design criteria

Staff Analysis

1. The application proposes a total of 72.1 square feet of signage to be distributed on two sign panels to clearly identify the tenant business. Section 78-141.4. - Sign standards for commercial districts, Table 141.4(a) specifies that one (1) square foot of sign area for each linear foot of frontage is authorized in the CS, Commercial Services, zoning district with a maximum of 150 square feet per sign. In this case, the tenant space occupies 75 linear feet of frontage along the façade facing Elden Street and the primary south facing façade, and thus the maximum sign area for this tenant space is 75 square feet. The proposed signage meets the location, sign area, and overall sign dimensions of the referenced zoning ordinance section. However, staff has noted that the scale and dimensions of the submitted drawings appear slightly inaccurate, though staff has made conservative extrapolations for critical overall dimensions to ensure compliance with the Town's Zoning Ordinance. As such, staff will require revised and accurate drawings to confirm staff's extrapolated dimensioning to ensure compliance with the Town's Zoning Ordinance.

2. The proposed signs meet the Town Zoning Ordinance, Section, 78-140.6. - General standards for all signs regarding, the sign types, design, placement, and illumination. However, staff has noted that the scale and dimensions of the submitted drawings appear slightly inaccurate, as noted above.

3. The proposed sign generally complies with the applicable design criteria within the Town's Architectural Control District as specified in Section 58-96 of the Town Code of Ordinances (Attachment #4). Staff finds that the proposed sign will clearly serve the purpose of identifying the tenant business and will be in keeping current signage design pattern(s) and previous ARB approvals for walls sign on this multi-tenant commercial building/property. The sign is readily readable while being proportional to the tenant and sign space.

Staff Recommendation:

Motion Alternatives:	1. Motion to deny the application. 2. Motion to approve the application as submitted. 3. Motion to approve with condition(s). 4. Motion to continue public hearing to a date certain or the next ARB Public Hearing for action to address a specified design issue or concern of the Board.

Recommended Motion:	Motion for approval of ARB #19-29, in accordance with Alternative #3, with the following condition: 1. The applicant shall revise the drawings to a common architectural/engineering scale with accurate and complete dimensions for staff zoning compliance review prior to issuance of a building permit; and 2. The proposed sign shall be constructed /installed in substantial conformance with the application and supporting materials as submitted June 18, 2019 and subsequent updates required to meet Condition #1.

Report Attachments

1.	Aerial Image
2.	Applicant Letter
3.	Site Plan, Sign Elevations & Photos, Details and Product Information
4.	Town's Code of Ordinances Division 4 - Standards, Sec. 58-96. (ARB) Design Criteria

Staff Contact

Name/Title:	**Christopher J. Garcia, Community Design Planner**
Phone/Email:	**(703)787-7380; christopher.garcia@herndon-va.gov**

Christopher J. Garcia
Community Design Planner

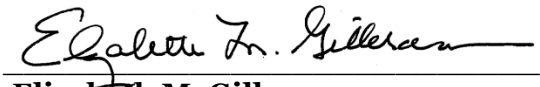

Elizabeth M. Gilleran
Director of Community Development

SITE LOCATION – AERIAL PHOTO

N

Imagery prepared by Town of Herndon
Department of Community Development
Image source: Google Earth © 2018

JBG SMITH

May 17, 2019

Bob Liang
Quickway Japanese Hibachi
1040 Elden Street
Herndon, VA 20170

To Whom It May Concern:

Please be advised that the Landlord/Owner of Dulles Park Shopping Center, LLC c/o JBG Smith, hereby authorizes and approves EZ Sign (Sign Contractor), acting on behalf of Quickway Japanese Hibachi (Tenant), to act as its agent for the installation of an awning at the above referenced premises.

Should additional information be required, please call me directly at 240.333.3899 or via e-mail at szackery@jbgsmith.com.

Sincerely,

Synethia Zackery

Synethia Zackery

Real Estate Manager

4445 Willard Avenue, Suite 400, Chevy Chase, Maryland 20815
240.333.3600 jbgsmith.com

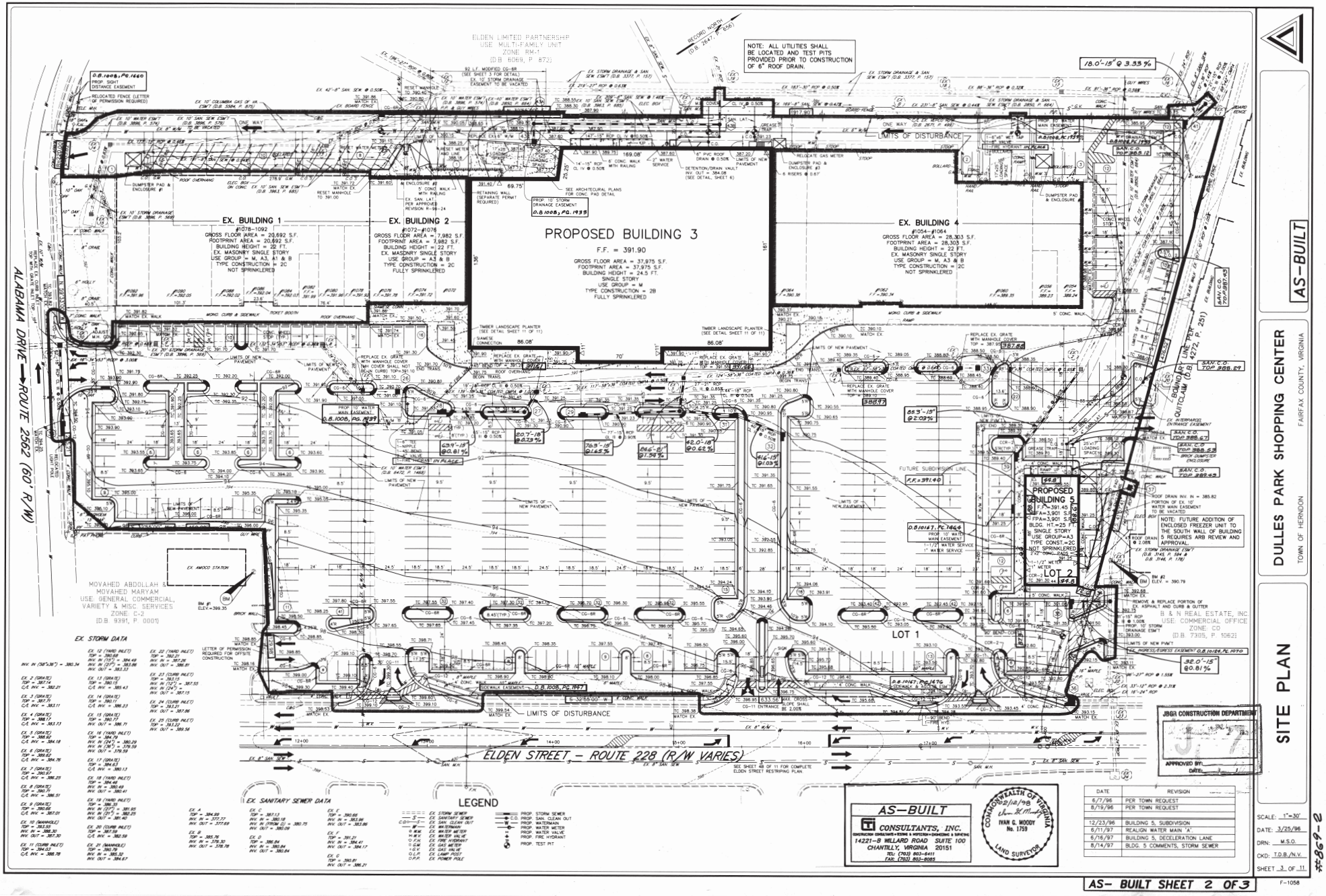
AS-BUILT
DULLES PARK SHOPPING CENTER
TOWN OF HERNDON
FAIRFAX COUNTY, VIRGINIA
SITE PLAN
NOTE: ALL UTILITIES SHALL BE LOCATED AND TEST PITS PROVIDED PRIOR TO CONSTRUCTION OF 6" ROOF DRAIN.
EX. BUILDING 1
#1078-1092
GROSS FLOOR AREA = 20,692 S.F.
FOOTPRINT AREA = 20,692 S.F.
BUILDING HEIGHT = 22 FT.
EX. MASONRY SINGLE STORY
USE GROUP = M, A3, A1 & B
TYPE CONSTRUCTION = 2C
NOT SPRINKLERED
EX. BUILDING 2
#1072-#1076
GROSS FLOOR AREA = 7,982 S.F.
FOOTPRINT AREA = 3,982 S.F.
BUILDING HEIGHT = 22 FT.
EX. MASONRY SINGLE STORY
USE GROUP = A3 & B
TYPE CONSTRUCTION = 2C
FULLY SPRINKLERED
PROPOSED BUILDING 3
F.F. = 391.90
GROSS FLOOR AREA = 37,975 S.F.
FOOTPRINT AREA = 37,975 S.F.
BUILDING HEIGHT = 24.5 FT.
SINGLE STORY
USE GROUP = M
TYPE CONSTRUCTION = 2B
FULLY SPRINKLERED
EX. BUILDING 4
#1064-#1084
GROSS FLOOR AREA = 28,303 S.F.
FOOTPRINT AREA = 28,303 S.F.
BUILDING HEIGHT = 22 FT.
EX. MASONRY SINGLE STORY
USE GROUP = M, A3 & B
TYPE CONSTRUCTION = 2C
NOT SPRINKLERED
PROPOSED BUILDING 5
F.F. = 391.45
FPA=3,901 S.F.
BLDG. HT.=25 FT.
SINGLE STORY
USE GROUP=A3
TYPE CONST.=2C
NOT SPRINKLERED
NOTE: FUTURE ADDITION OF ENCLOSED FREEZER UNIT TO THE SOUTH WALL OF BUILDING 5 REQUIRES ARB REVIEW AND APPROVAL.
LOT 1
LOT 2
ALABAMA DRIVE → ROUTE 2562 (60' R/W)
ELDEN STREET – ROUTE 228 (R/W VARIES)
LIMITS OF DISTURBANCE
EX. AMOCO STATION
MOVAHED ABDOLLAH & MOVAHED MARYAM
USE: GENERAL COMMERCIAL, VARIETY & MISC. SERVICES
ZONE: C-2
(D.B. 9391, P. 0001)
ELDEN LIMITED PARTNERSHIP
USE: MULTI-FAMILY UNIT
ZONE: RM-4
(D.B. 7069, P. 873)
B & N REAL ESTATE, INC.
USE: COMMERCIAL OFFICE
ZONE: CO
(D.B. 7315, P. 1862)
EX. STORM DATA
EX. SANITARY SEWER DATA
LEGEND
EX. STORM SEWER
EX. SANITARY SEWER
EX. SAN. CLEAN OUT
EX. WATERMAIN
EX. WATER METER
EX. WATER VALVE
EX. FIRE HYDRANT
EX. GAS METER
EX. GAS VALVE
EX. LAMP POST
EX. POWER POLE
PROP. STORM SEWER
PROP. SAN. CLEAN OUT
PROP. WATERMAIN
PROP. WATER METER
PROP. WATER VALVE
PROP. FIRE HYDRANT
PROP. TEST PIT
AS-BUILT
CONSULTANTS, INC.
14221-B WILLARD ROAD SUITE 100
CHANTILLY, VIRGINIA 20151
TEL: (703) 803-8411
FAX: (703) 803-8085
COMMONWEALTH OF VIRGINIA
IVAN G. MOODY
No. 1759
LAND SURVEYOR
JBGR CONSTRUCTION DEPARTMENT
APPROVED BY:
DATE:
DATE | REVISION
6/7/96 | PER TOWN REQUEST
8/19/96 | PER TOWN REQUEST
12/23/96 | BUILDING 5, SUBDIVISION
6/11/97 | REALIGN WATER MAIN "A"
6/16/97 | BUILDING 5, DECELERATION LANE
8/14/97 | BLDG. 5 COMMENTS, STORM SEWER
SCALE: 1"=30'
DATE: 3/25/96
DRN: M.S.O.
CKD: T.D.B./N.V.
SHEET 3 OF 11
AS- BUILT SHEET 2 OF 3
F-1058
#2-696

ELEVATION - PROPOSED // STORE FRONT

APPROXIMATE SCALE: 1/4" = 1'-0"

BUILDING FRONTAGE APPROXIMATE 27'

EZ SIGN
Signs & Graphics
Find us on

Phone : 703.801.0734
Email : info @ ezsign24.com
http://www.ezsign24.com

4511 Daly Dr. Suite H
Chantilly, VA. 2015

Project :
Quickway Hapanese Hibachi

Address :
1040 Elden St,
Herndon, VA 20170

Date :
09/16/2018

Page :
02-02

This is an original unpublished drawing created by EZ SIGN. It is submitted for your approval. It is not to be shown to anyone outside of your organization, nor is it to be reproduced, copied or exhibited in any fashion. The changing of colors, sizes, materials or illumination method does not alter the design. Ownership of this design is held by EZ SIGN. Authorization to use this design in any fashion must be obtained in writing from EZ SIGN.

Note: The Colors depicted here are a graphic representation. Actual colors may vary. See color specifications.

CHANNEL LETTERS SIGNAGE ON THE CUSTOM FABRICATED BASE BOARD (Store Front)

Qty: One (1) Sign Required

Scale : 1/2 = 1'-0"

APPROXIMATE SIGNAGE = 37.2 SQ FT

LETTER LAYOUT & SPECIFICATIONS

- **L.E.D. FACE LIT CHANNEL LETTERS**

Scale : N.T.S

1. 4"DEEP 0.040 ALUMINUM CHANNEL LETTERS BLACK COLOR ON EXTERIOR SURFACE AND WHITE ENAMEL ON INTERIOR SURFACES
2. WHITE LED MODULES
3. **QUICKWAY** : 3/16 #7328 WHITE ACRYLIC PLASTIC FACES

   JAPANESE HIBACHI : 3/16 #7328 WHITE ACRYLIC PLASTIC FACES

   LOGO : 3/16 #7328 WHITE ACRYLIC PLASTIC FACES W/ #790000 COLOR TRANSLUCENT DIGITAL PRINTING BORDER LINE OVERLAYS
4. 1"BLACK COLOR TRIM
5. 1/4"DRAIN HOLES
6. USE MINIMUM FOUR OF 1/4" SCREW FOR THE EACH SIGNS
7. LED TRANSFORMER
8. SIGN SWITCH PRIMARY ELECTRICAL SOURCE (120V 20A)
9. 120V POWER SUPPLY
   POWER : BLACK - LINE
   WHITE - NEUTRAL
   GREEN - GROUND
10. SIGN BASE
    BASE BOARD : 2" DEEP 0.063 ALUMINUM SHEET WITH SQUARE TUBE
    PAINT : MATCH WITH CORPORATE COLOR

ISTALLATION : REFER DETAIL A

- D1 8PCS 12x2" FLAT STAINLESS SCREW
- D2 SIGNBOARD
- D3 1 3/4x1 3/4 AND 1/8 ALUMINUM ANGLE FRAME
- D4 8PCS OF 3/8 TOGGLE BOLTS

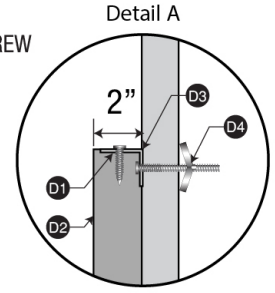

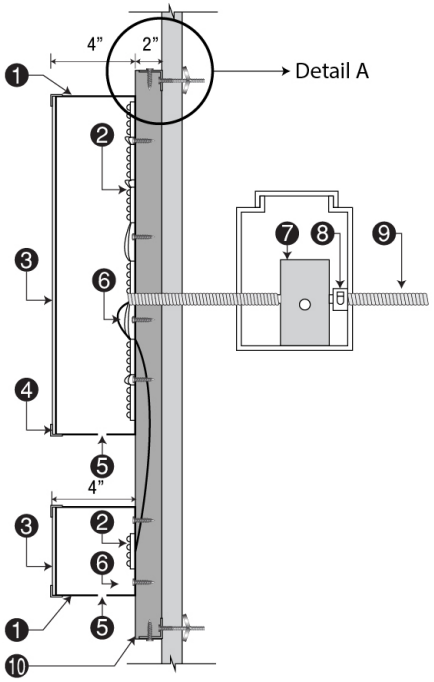

EZ SIGN Signs & Graphics
Find us on

Phone : 703.801.0734
Email : info @ ezsign24.com
http://www.ezsign24.com

4511 Daly Dr. Suite H
Chantilly, VA. 2015

Project :
Quickway Hapanese Hibachi

Address :
1040 Elden St,
Herndon, VA 20170

Date :
09/16/2018

Page :
01-02

This is an original unpublished drawing created by EZ SIGN. It is submitted for your approval. It is not to be shown to anyone outside of your organization, nor is it to be reproduced, copied or exhibited in any fashion. The changing of colors, sizes, materials or illumination method does not alter the design. Ownership of this design is held by EZ SIGN. Authorization to use this design in any fashion must be obtained in writing from EZ SIGN.

Note: The Colors depicted here are a graphic representation. Actual colors may vary. See color specifications.

ELEVATION - PROPOSED // STORE FRONT

APPROXIMATE SCALE: 1/4” = 1’-0”

EZ SIGN
Signs & Graphics
Find us on

Phone : 703.801.0734
Email : info @ ezsign24.com
http://www.ezsign24.com

4511 Daly Dr. Suite H
Chantilly, VA. 2015

Project :
Quickway Hapanese Hibachi

Address :
1040 Elden St,
Herndon, VA 20170

Date :
09/16/2018

Page :
02-02

This is an original unpublished drawing created by EZ SIGN. It is submitted for your approval. It is not to be shown to anyone outside of your organization, nor is it to be reproduced, copied or exhibited in any fashion. The changing of colors, sizes, materials or illumination method does not alter the design. Ownership of this design is held by EZ SIGN. Authorization to use this design in any fashion must be obtained in writing from EZ SIGN.

Note: The Colors depicted here are a graphic representation. Actual colors may vary. See color specifications.

CHANNEL LETTERS SIGNAGE ON THE CUSTOM FABRICATED BASE BOARD (Building Side)

Qty: One (1) Sign Required

Scale : 1/2 = 1'-0"

APPROXIMATE SIGNAGE = 23 SQ FT

EZ SIGN Signs & Graphics
Find us on

Phone : 703.801.0734
Email : info @ ezsign24.com
http://www.ezsign24.com

4511 Daly Dr. Suite H
Chantilly, VA. 2015

Project :
Quickway Hapanese Hibachi

Address :
1040 Elden St,
Herndon, VA 20170

Date :
09/16/2018

Page :
01-02

This is an original unpublished drawing created by EZ SIGN. It is submitted for your approval. It is not to be shown to anyone outside of your organization, nor is it to be reproduced, copied or exhibited in any fashion. The changing of colors, sizes, materials or illumination method does not alter the design. Ownership of this design is held by EZ SIGN. Authorization to use this design in any fashion must be obtained in writing from EZ SIGN.

Note: The Colors depicted here are a graphic representation. Actual colors may vary. See color specifications.

LETTER LAYOUT & SPECIFICATIONS

- **L.E.D. FACE LIT CHANNEL LETTERS**

Scale : N.T.S

1. 4"DEEP 0.040 ALUMINUM CHANNEL LETTERS BLACK COLOR ON EXTERIOR SURFACE AND WHITE ENAMEL ON INTERIOR SURFACES
2. WHITE LED MODULES
3. **QUICKWAY** : 3/16 #7328 WHITE ACRYLIC PLASTIC FACES

   JAPANESE HIBACHI : 3/16 #7328 WHITE ACRYLIC PLASTIC FACES

   LOGO : 3/16 #7328 WHITE ACRYLIC PLASTIC FACES W/ #790000 COLOR TRANSLUCENT DIGITAL PRINTING BORDER LINE OVERLAYS
4. 1"BLACK COLOR TRIM
5. 1/4"DRAIN HOLES
6. USE MINIMUM FOUR OF 1/4" SCREW FOR THE EACH SIGNS
7. LED TRANSFORMER
8. SIGN SWITCH PRIMARY ELECTRICAL SOURCE (120V 20A)
9. 120V POWER SUPPLY
   POWER : BLACK - LINE
   WHITE - NEUTRAL
   GREEN - GROUND
10. SIGN BASE
    BASE BOARD : 2" DEEP 0.063 ALUMINUM SHEET WITH SQUARE TUBE
    PAINT : MATCH WITH CORPORATE COLOR

ISTALLATION : REFER DETAIL A

- D1 8PCS 12x2" FLAT STAINLESS SCREW
- D2 SIGNBOARD
- D3 1 3/4x1 3/4 AND 1/8 ALUMINUM ANGLE FRAME
- D4 8PCS OF 3/8 TOGGLE BOLTS

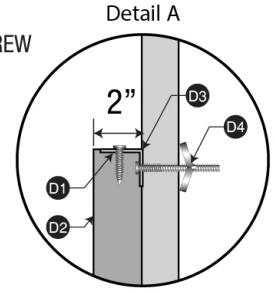

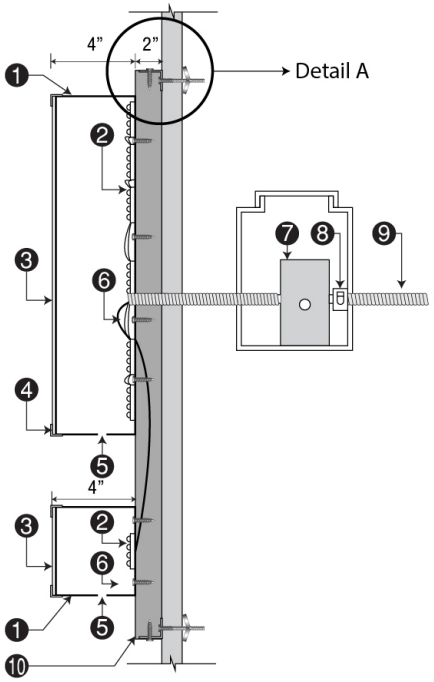

ARCHITECTURAL REVIEW BOARD STANDARDS FOR DESIGN REVIEW
Taken from ARB Charter – Chapter 58 (Planning) of Herndon Town Code (2000)

DIVISION 4. STANDARDS* _____
***Charter references:** Standards and purpose, § 7.4:1(c). _____

Sec. 58-96. Design criteria.
The board of architectural review and, on appeal, the town council shall use the following standards and criteria in considering applications filed under this article:

(1) Whether or not the proposed architectural design is suitable for a good suburban community in terms of external architectural features, including signs subject to public view, general design and arrangement, texture, color, line, mass, dimension, material and lighting.

(2) Whether or not the proposed structure, building or improvement is compatible with existing well-designed structures, acceptable to the board, in the vicinity and in the town as a whole.

(3) Whether or not, and to what extent, the proposed structure, building or improvement would promote the general welfare and protect the public health, safety and morals by tending to maintain or augment the town's tax base as a whole, generating business activity, maintaining and creating employment opportunity, preserving historical sites and structures and making the town a more attractive and desirable place in which to live.

(4) Whether or not proposed freestanding buildings use the same or architecturally harmonious materials, color, texture and treatment for all exterior walls; and in the case of partially freestanding buildings, whether or not the same or architecturally harmonious materials, color, texture and treatment are used on all portions of all exterior walls exposed to public view.

(5) Whether or not the combination of architectural elements proposed for a structure, building or improvement, in terms of design, line, mass, dimension, color, material, texture, lighting, landscaping and roofline and height conform to accepted architectural principles for permanent buildings as contrasted with engineering standards designed to satisfy safety requirements only; and exhibit external characteristics of demonstrated architecture and aesthetic durability.

(6) Whether or not, in terms of design, material, texture, color, lighting, landscaping, dimension, line, mass or roof line and height, the proposed structure, building or improvement is designed to serve primarily as an advertisement or commercial display, exhibits exterior characteristics likely to deteriorate rapidly, would be of temporary or shortterm architectural or aesthetic acceptability, would be plainly offensive to human sensibilities or would otherwise constitute a reasonable foreseeable detriment to the community.

(Code 1992, § 4-16)

TOWN OF Herndon VIRGINIA

STAFF REPORT
Architectural Review Board
August 2, 2019

Case Number & Type: ARB #19-30; Alterations to an existing structure
Case Summary: Install new fabric cover awnings over tenant space storefronts
Case Location: 1040 Elden Street, Dulles Park Shopping Center

Location Map

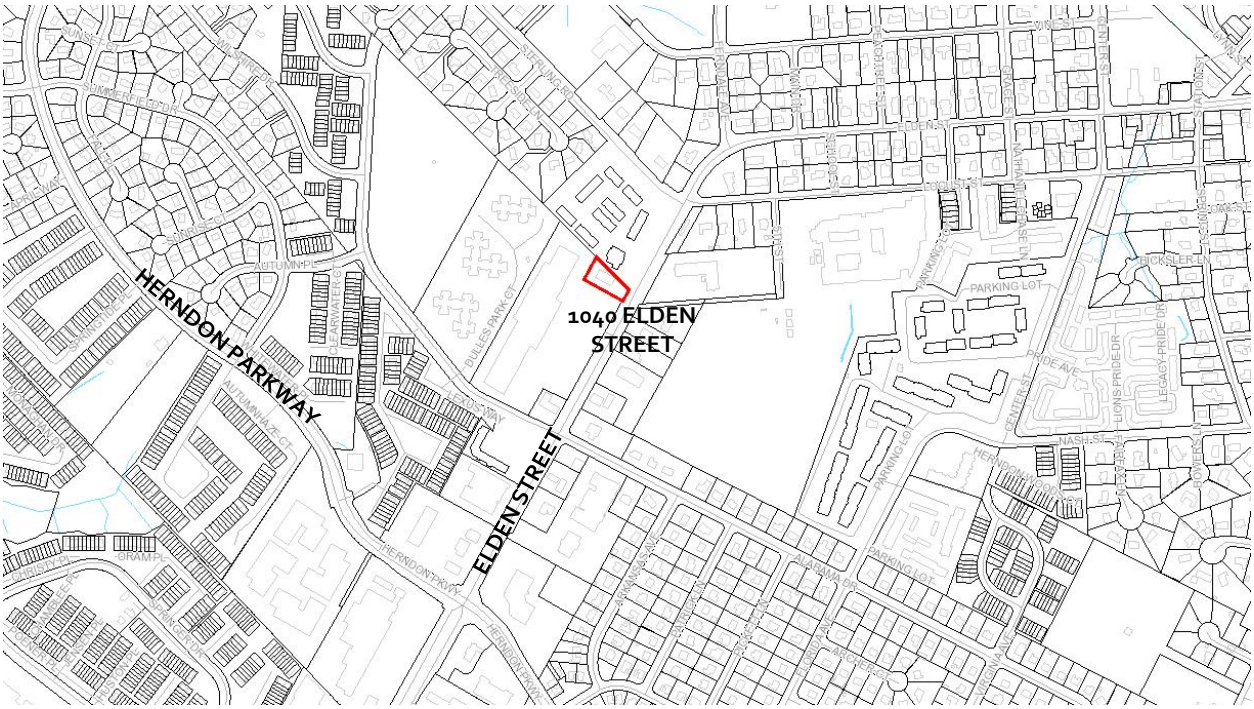

Property Information

Owner / Applicant:	Dulles Park Shopping Center, LLC TR c/o JBG Smith Properties		
Representative:	James Sung, Sign To Go		
Business/Organization:	Quickway Japanese Hibachi		
Property Use:	Commercial / retail		
Zoning District:	CS – Commercial Services		
Adjacent Zoning:	**North:** CS – Commercial Services/CO – Commercial Office **South:** CS – Commercial Services	**East:** CS – Commercial Services **West:** CS – Commercial Services	
Associated Cases:	ARB #19-29		
Building Type(s):	One-story, multi-tenant commercial	**Date of Construction:**	1997
Architectural Style(s):	Post-modern, typical suburban commercial/retail shopping center design		

Exterior Material(s):	Composite – CMU structure, brick veneer with stucco or EIFS finishes, typical retail/commercial storefront windows and doors
Neighborhood Design Profile:	Existing commercial and office

Case Details

Case Description:

The applicant is proposing to install two new fabric covered awnings for a *Quickway Japanese Hibachi* food service business. The proposed awnings will be located at approximately 13.5' feet above ground level and below the proposed *Quickway Japanese Hibachi* sign panels, the subject of ARB #19-29. The south facing awning will span 23.2' across the south elevations and will be 3'-0" in height. The east awning will span 10.6' feet across the east elevation and will also be 3'-0" in height. The application proposes to utilize 1" welded aluminum members to form the triangular support structure that will be flush mounted to the exterior walls, using Z-shaped brackets and lag bolts.

The awning fabric will be a Sunbrella® fabric, colored in a *Jockey Red*. The material will cover the aluminum support structure and its end wings (Attachments #1, #2, and #3).

Case Background:

The property has been the subject of numerous ARB cases and administrative approvals for tenant alterations and signage over time as business tenants have changed in the various tenant spaces. ARB #19-30 is coupled with ARB #19-29, which considers new signage over the storefronts on the south and east elevations for this business.

Applicable Design Guidelines & Standards:

- Town Code of Ordinances, Section 58-96 Design criteria

Staff Analysis

1. The proposed alterations comply with the applicable design criteria within the Town's Architectural Control District as specified in Section 58-96 of the Town Code of Ordinances (Attachment #4). Staff finds that the proposed awnings will serve the purpose of reducing sun exposure and heat gain in the interior spaces for this food service business and will not detract from the architecture of this relatively unadorned commercial building. However, staff finds the selected bright red awning fabric to be visually overpowering and is not visually complementary when viewed with the proposed new signage and the building design and color scheme. Staff is recommending that the Board and the applicant consider a less obtrusive color such as *Black Cherry* or *Burgundy* colors offered by the manufacturer. The staff has determined that these darker colors would be to be more complementary to the building materials and the proposed wall sign color composition found in the ARB #19-29 sign design.

Staff Recommendation:

Motion Alternatives:	1. Motion to deny the application. 2. Motion to approve the application as submitted. 3. Motion to approve with condition(s). 4. Motion to continue public hearing to a date certain or the next ARB Public Hearing for action to address a specified design issue or concern of the Board.
Recommended Motion:	Motion for approval of ARB #19-30, in accordance with Alternative #3, with the following condition: 1. The applicant shall revise the submission to reflect *Black Cherry* or *Burgundy* colors offered by the awning fabric manufacturer to be more complementary to the building materials and/or proposed sign color; and 2. The proposed sign shall be constructed /installed in substantial conformance with the application and supporting materials as submitted June 18, 2019 and subsequent updates required to meet Condition #1.

Report Attachments

1.	Aerial Image
2.	Applicant Letter
3.	Site Plan, Sign Elevations, and Details
4.	Town's Code of Ordinances Division 4 - Standards, Sec. 58-96. (ARB) Design Criteria

Staff Contact

Name/Title:	**Christopher J. Garcia, Community Design Planner**
Phone/Email:	**(703)787-7380; christopher.garcia@herndon-va.gov**

Christopher J. Garcia
Community Design Planner

Elizabeth M. Gilleran
Director of Community Development

SITE LOCATION – AERIAL PHOTO

N

Imagery prepared by Town of Herndon
Department of Community Development
Image source: Google Earth © 2018

JBG SMITH

May 17, 2019

Bob Liang
Quickway Japanese Hibachi
1040 Elden Street
Herndon, VA 20170

To Whom It May Concern:

Please be advised that the Landlord/Owner of Dulles Park Shopping Center, LLC c/o JBG Smith, hereby authorizes and approves EZ Sign (Sign Contractor), acting on behalf of Quickway Japanese Hibachi (Tenant), to act as its agent for the installation of an awning at the above referenced premises.

Should additional information be required, please call me directly at 240.333.3899 or via e-mail at szackery@jbgsmith.com.

Sincerely,

Synethia Zackery

Synethia Zackery

Real Estate Manager

4445 Willard Avenue, Suite 400, Chevy Chase, Maryland 20815
240.333.3600 jbgsmith.com

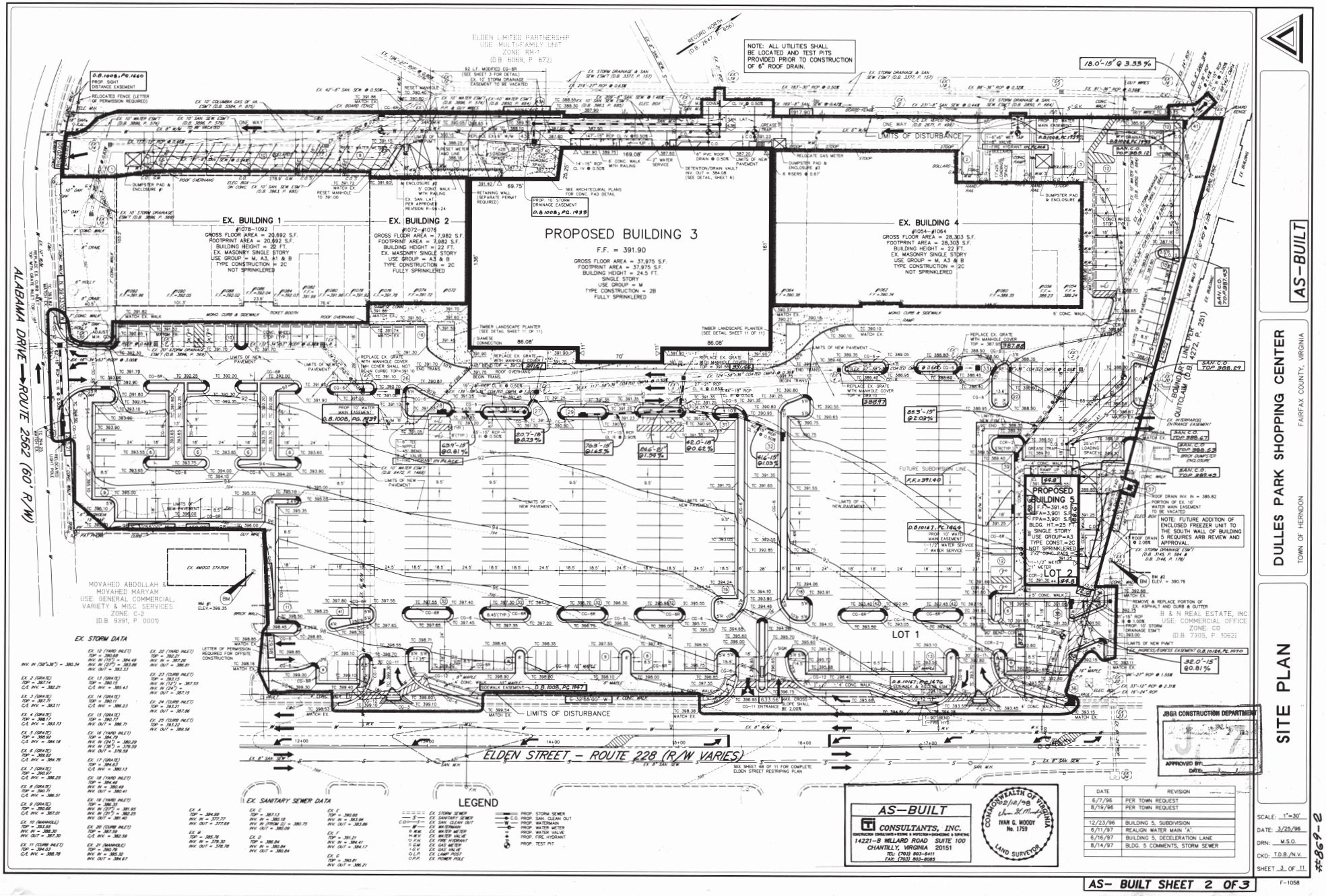
AS-BUILT
DULLES PARK SHOPPING CENTER
TOWN OF HERNDON
FAIRFAX COUNTY, VIRGINIA
SITE PLAN
NOTE: ALL UTILITIES SHALL BE LOCATED AND TEST PITS PROVIDED PRIOR TO CONSTRUCTION OF 6" ROOF DRAIN.
EX. BUILDING 1
#1078-1092
GROSS FLOOR AREA = 20,692 S.F.
FOOTPRINT AREA = 20,692 S.F.
BUILDING HEIGHT = 22 FT.
EX. MASONRY SINGLE STORY
USE GROUP = M, A3, A1 & B
TYPE CONSTRUCTION = 2C
NOT SPRINKLERED
EX. BUILDING 2
#1072-#1076
GROSS FLOOR AREA = 7,982 S.F.
FOOTPRINT AREA = 3,982 S.F.
BUILDING HEIGHT = 22 FT.
EX. MASONRY SINGLE STORY
USE GROUP = A3 & B
TYPE CONSTRUCTION = 2C
FULLY SPRINKLERED
PROPOSED BUILDING 3
F.F. = 391.90
GROSS FLOOR AREA = 37,975 S.F.
FOOTPRINT AREA = 37,975 S.F.
BUILDING HEIGHT = 24.5 FT.
SINGLE STORY
USE GROUP = M
TYPE CONSTRUCTION = 2B
FULLY SPRINKLERED
EX. BUILDING 4
#1064-#1084
GROSS FLOOR AREA = 28,303 S.F.
FOOTPRINT AREA = 28,303 S.F.
BUILDING HEIGHT = 22 FT.
EX. MASONRY SINGLE STORY
USE GROUP = M, A3 & B
TYPE CONSTRUCTION = 2C
NOT SPRINKLERED
PROPOSED BUILDING 5
F.F. = 391.45
FA=3,901 S.F.
BLDG. HT.=25 FT.
SINGLE STORY
USE GROUP=A3
TYPE CONST.=2C
NOT SPRINKLERED
LOT 1
LOT 2
ALABAMA DRIVE → ROUTE 2562 (60' R/W)
ELDEN STREET – ROUTE 228 (R/W VARIES)
LIMITS OF DISTURBANCE
EX. AMOCO STATION
MOVAHED ABDOLLAH & MOVAHED MARYAM
USE: GENERAL COMMERCIAL, VARIETY & MISC. SERVICES
ZONE: C-2
(D.B. 9391, P. 0001)
ELDEN LIMITED PARTNERSHIP
USE: MULTI-FAMILY UNIT
ZONE: RM-4
(D.B. 7069, P. 873)
B & N REAL ESTATE, INC.
USE: COMMERCIAL OFFICE
ZONE: CO
(D.B. 7315, P. 1062)
EX. STORM DATA
EX. SANITARY SEWER DATA
LEGEND
EX. STORM SEWER
EX. SANITARY SEWER
EX. SAN. CLEAN OUT
EX. WATERMAIN
EX. WATER METER
EX. WATER VALVE
EX. FIRE HYDRANT
EX. GAS METER
EX. GAS VALVE
EX. LAMP POST
EX. POWER POLE
PROP. STORM SEWER
PROP. SAN. CLEAN OUT
PROP. WATERMAIN
PROP. WATER METER
PROP. WATER VALVE
PROP. FIRE HYDRANT
PROP. TEST PIT
AS-BUILT
CONSULTANTS, INC.
14221-B WILLARD ROAD SUITE 100
CHANTILLY, VIRGINIA 20151
TEL: (703) 803-8411
FAX: (703) 803-8085
COMMONWEALTH OF VIRGINIA
IVAN G. MOODY
No. 1759
LAND SURVEYOR
JBGR CONSTRUCTION DEPARTMENT
APPROVED BY:
DATE:
DATE | REVISION
6/7/96 | PER TOWN REQUEST
8/19/96 | PER TOWN REQUEST
12/23/96 | BUILDING 5, SUBDIVISION
6/11/97 | REALIGN WATER MAIN "A"
6/16/97 | BUILDING 5, DECELERATION LANE
8/14/97 | BLDG. 5 COMMENTS, STORM SEWER
SCALE: 1"=30'
DATE: 3/25/96
DRN: M.S.O.
CKD: T.D.B./N.V.
SHEET 3 OF 11
AS- BUILT SHEET 2 OF 3
F-1058
#2-698

QUICKWAY JAPANESE HIBACHI | New awning system for the store front and side

Specifications

Front view Scale : 3/8”=1’-0”

Side view (End wings) Scale : NTS

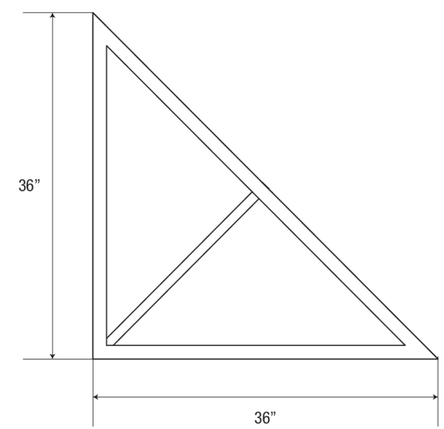

Installation Detail Scale : NTS

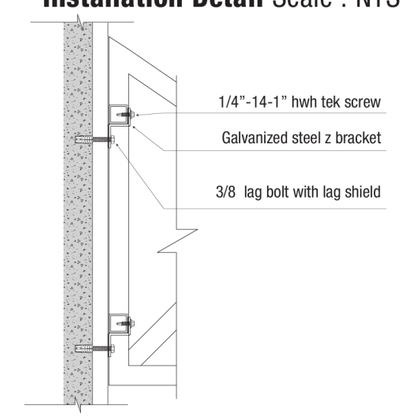

- **Frames : aluminum 6063-T5 1” SQ. extrusion connections shall fully be welded.**
- **Fabric : Awning material may vary depending on the method to make lettering on awning face**
- **Color : Jockey Red 4663-0000**

ELEVATION - PROPOSED // Front of store Scale : NTS

Picture shown is for illustration purpose only

ELEVATION - PROPOSED // Side of store Scale : NTS

Picture shown is for illustration purpose only

EZ SIGN Signs & graphics
Find us on
Phone : 703.801.0734
Email : info @ ezsign24.com
http://www.ezsign24.com
4511 DALY DR STE. H
Chantilly, VA. 2015

Project :
BEST BUY CARPET

Address :
1401 Chain Bridge Rd
McLean Va 22101

Date :
01-28-2019

This is an original unpublished drawing created by EZ SIGN. It is submitted for your approval. It is not to be shown to anyone outside of your organization, nor is it to be reproduced, copied or exhibited in any fashion. The changing of colors, sizes, materials or illumination method does not alter the design. Ownership of this design is held by EZ SIGN. Authorization to use this design in any fashion must be obtained in writing from EZ SIGN.

Note: The Colors depicted here are a graphic representation. Actual colors may vary. See color specifications.

ARCHITECTURAL REVIEW BOARD STANDARDS FOR DESIGN REVIEW
Taken from ARB Charter – Chapter 58 (Planning) of Herndon Town Code (2000)

DIVISION 4. STANDARDS* _____
***Charter references:** Standards and purpose, § 7.4:1(c). _____

Sec. 58-96. Design criteria.
The board of architectural review and, on appeal, the town council shall use the following standards and criteria in considering applications filed under this article:

(1) Whether or not the proposed architectural design is suitable for a good suburban community in terms of external architectural features, including signs subject to public view, general design and arrangement, texture, color, line, mass, dimension, material and lighting.

(2) Whether or not the proposed structure, building or improvement is compatible with existing well-designed structures, acceptable to the board, in the vicinity and in the town as a whole.

(3) Whether or not, and to what extent, the proposed structure, building or improvement would promote the general welfare and protect the public health, safety and morals by tending to maintain or augment the town's tax base as a whole, generating business activity, maintaining and creating employment opportunity, preserving historical sites and structures and making the town a more attractive and desirable place in which to live.

(4) Whether or not proposed freestanding buildings use the same or architecturally harmonious materials, color, texture and treatment for all exterior walls; and in the case of partially freestanding buildings, whether or not the same or architecturally harmonious materials, color, texture and treatment are used on all portions of all exterior walls exposed to public view.

(5) Whether or not the combination of architectural elements proposed for a structure, building or improvement, in terms of design, line, mass, dimension, color, material, texture, lighting, landscaping and roofline and height conform to accepted architectural principles for permanent buildings as contrasted with engineering standards designed to satisfy safety requirements only; and exhibit external characteristics of demonstrated architecture and aesthetic durability.

(6) Whether or not, in terms of design, material, texture, color, lighting, landscaping, dimension, line, mass or roof line and height, the proposed structure, building or improvement is designed to serve primarily as an advertisement or commercial display, exhibits exterior characteristics likely to deteriorate rapidly, would be of temporary or shortterm architectural or aesthetic acceptability, would be plainly offensive to human sensibilities or would otherwise constitute a reasonable foreseeable detriment to the community.

(Code 1992, § 4-16)

TOWN OF Herndon VIRGINIA

STAFF REPORT
Architectural Review Board
August 2, 2019

Case Number & Type: ARB #19-31; Wall Signs
Case Summary: Install new business signs on an exterior wall of an existing multi-tenant commercial building
Case Location: 360 Herndon Parkway #2150, Sugarland Industrial Park

Location Map

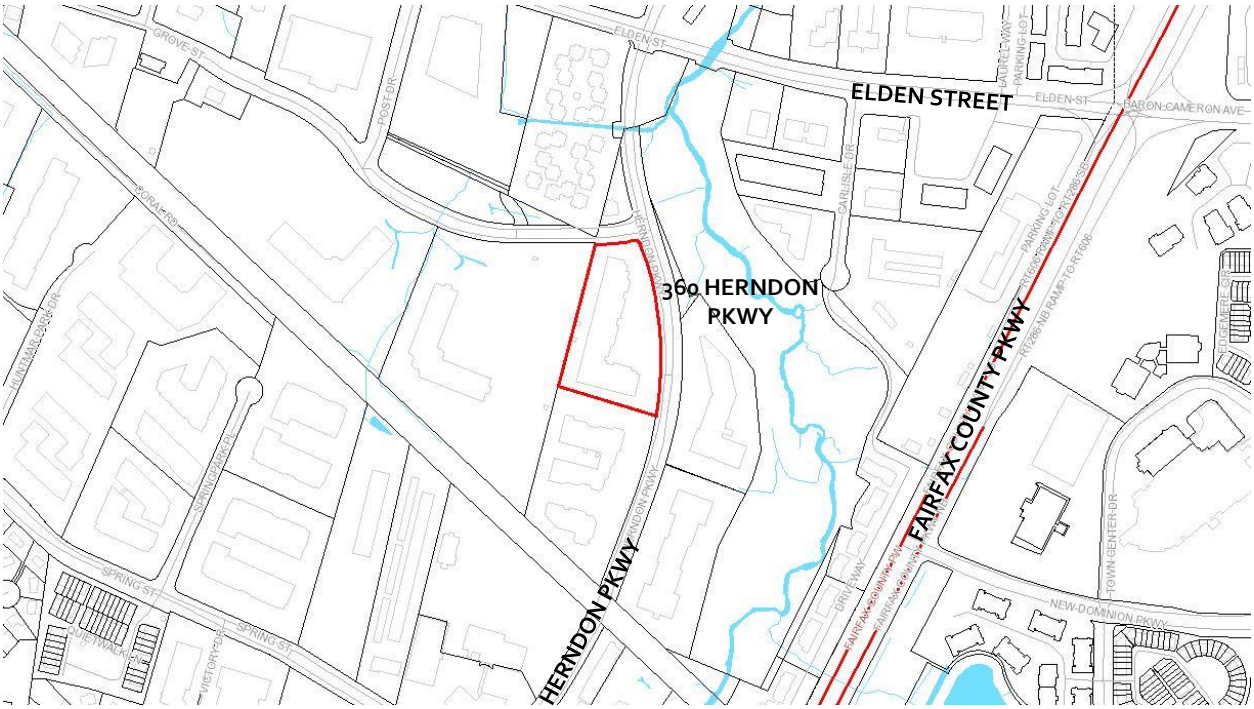

Property Information

Owner / Applicant:	North Washington, LLC c/o Borger Management, Inc.		
Representative:	Anthony Bashorun, Signarama		
Business/Organization:	Herndon Animal Medical Hospital		
Property Use:	Commercial / light industrial		
Zoning District:	O&LI - Office and Light Industrial		
Adjacent Zoning:	**North:** CS – Commercial Services / O&LI - Office and Light Industrial **South:** O&LI, Office and Light Industrial	**East:** O&LI, Office and Light Industrial **West:** O&LI, Office and Light Industrial	
Associated Cases:	N/A		
Building Type(s):	One-story, multi-tenant commercial / light industrial	**Date of Construction:**	1985
Architectural Style(s):	Post-modern, typical suburban commercial / light industrial and business park design		

Exterior Material(s):	Composite – Brick typical with commercial ribbon storefront windows and doors, flat parapet roofline with composite/membrane roof system
Neighborhood Design Profile:	Existing commercial office and light industrial

Case Details

Case Description:

The applicant is proposing to install two new non-illuminated commercial business signs for an animal care business on the east facing elevation of a multi-tenant building facing the Herndon Parkway . The application proposes to utilize the business name and a logo, made of white, formed plastic and flush mounted using aluminum studs, to be located over the tenant space ribbon windows. The business name, *Herndon Animal Medical Center*, will be installed in two lines of 12" *sans serif* letters with overall dimensions of approximately 2'-7" X 11'-8"and placed vertically between the top of the parapet/coping of the roofline and the top of the ribbon windows. The business logo will be in the form of a white medical cross with positive and negative cutouts of a cat and a dog and will be sized at overall dimensions of approximately 3'-1" X 3'-6" and placed vertically between the top of the parapet/coping of the roofline and the top of the ribbon windows.

Using the method for calculating the wall sign area(s) found in the Town's Zoning Ordinance, the signs will have overall sign areas of 30.1 square feet and 10.8 square feet, totaling 40.9 square feet (Attachments #1, #2, and #3).

Case Background:

The property has been the subject of numerous ARB cases and administrative approvals for tenant signage over time as businesses have changed in the various tenant spaces. The proposed signs do not meet the lettering and overall dimensional standards required by the approved master sign plan for this property, thus requiring review and approval from the Architectural Review Board.

Applicable Design Guidelines & Standards:

- Town Zoning Ordinance, Section, 78-140.6. - General standards for all signs
- Town Zoning Ordinance Section 78-141.4. - Sign standards for commercial districts
- Town Code of Ordinances, Section 58-96 Design criteria

Staff Analysis

1. The application proposes a total of 40.9 square feet of signage to be distributed on two signs on the east facing elevation to identify the tenant business. Section 78-141.4. - Sign standards for commercial districts, Table 141.4(a) specifies that in the O&LI, Office & Light Industrial zoning district one (1) square foot of sign area for each linear foot of frontage is authorized with a maximum of 150 square feet per sign. In this case, the tenant space occupies 28.8 linear feet of frontage along the east façade along Herndon Parkway, and thus the maximum sign area for this tenant space is 28 square

feet. The proposed signage does not meet the sign area requirements of the referenced zoning ordinance section. In addition, staff has noted that the scale and dimensions of the submitted drawings appear slightly inaccurate, though staff has made conservative calculations using the applicant's conceptual dimensioning. As such, staff will require revised and accurate drawings to confirm staff's calculations to ensure compliance with the Town's Zoning Ordinance.

Zoning compliance is required for the proposed sign design prior to the Board considering and acting upon any case. If the applicant can reduce the overall sign area to comply with Section 78-141.4. - Sign standards for commercial districts, Table 141.4(a) with updated submission materials submitted no later than August 14, 2019, staff can review the updates and provide a revised recommendation for the Board's consideration. Presuming zoning compliance is achieved in the revised submission materials, the Board could act on the case at the August 21, 2019 ARB Public Hearing.

2. The proposed signs meet the Town Zoning Ordinance, Section, 78-140.6. - General standards for all signs regarding, the sign types, design, placement, and illumination. However, staff has noted that the scale and dimensions of the submitted drawings appear slightly inaccurate, as noted above.

3. The proposed signs generally comply with the applicable design criteria within the Town's Architectural Control District as specified in Section 58-96 of the Town Code of Ordinances (Attachment #4). Staff finds that the proposed sign will clearly serve the purpose of identifying the tenant business and will be in keeping with current signage design pattern(s) and previous ARB approvals for walls sign on this multi-tenant commercial building/property. However, the signs should be centered vertically between the top brick soldier or rowlock course just above the ribbon window and the bottom of the coping of the roofline, so as to center the signs vertically on the visible brick stretches courses above the ribbon windows. While there is variation in the tenant sign placement, the intent of this requirement is to building consistency in sign placement similar to the building address signage and some existing tenant signage. The sign is readily readable and would be proportional to the tenant and sign space available once the sign area is reduced as required by the Zoning Ordinance.

Staff Recommendation:

Motion Alternatives:	1. Motion to deny the application. 2. Motion to approve the application as submitted. 3. Motion to approve with condition(s). 4. Motion to continue public hearing to a date certain or the next ARB Public Hearing for action to address a specified design issue or concern of the Board.
Recommended Motion:	Motion for continuance of ARB #19-31, in accordance with Alternative #4, to allow the applicant to address the following condition: 1. Compliance with Section 78-141.4. - Sign standards for commercial districts, Table 141.4(a).

Report Attachments

1.	Aerial Image
2.	Applicant Letter
3.	Site Plan, Sign Elevations & Photos, Details and Product Information
4.	Town's Code of Ordinances Division 4 - Standards, Sec. 58-96. (ARB) Design Criteria

Staff Contact

Name/Title:	**Christopher J. Garcia, Community Design Planner**
Phone/Email:	**(703)787-7380; christopher.garcia@herndon-va.gov**

Christopher J. Garcia
Community Design Planner

Elizabeth M. Gilleran
Director of Community Development

SITE LOCATION – AERIAL PHOTO

Imagery prepared by Town of Herndon
Department of Community Development
Image source: Google Earth © 2018

Attachment #2

Signarama®
The way to grow your business.

RECEIVED ON
JUN 28 2019
DEPARTMENT OF COMMUNITY DEVELOPMENT

Description of Signage

Regarding:
Herndon Animal Medical Center
360 Herndon Parkway Suite 2150
Herndon, VA 20170

To Whom it May Concern,

The proposed signage for Herndon Animal Medical Center is stud mounted formed plastic dimensional letters and logo. This will be wall mounted flush with the façade.

Anthony Bashorun
Signarama Herndon
316 Victory Drive
Herndon, VA 20170
Anthony@signarama-herndon.com
703-481-8858 (Office)
703-597-2522 (Cell)

BORGER
MANAGEMENT

RECEIVED ON
JUN 28 2019
DEPARTMENT OF COMMUNITY DEVELOPMENT

June 17, 2019

RE:
Herndon Animal Medical Center
360 Herndon Parkway Suite 150
Herndon, VA 20170

AUTHORIZATION LETTER FOR EXTERIOR SIGN/APPLY FOR SIGN PERMIT

Dear Sir/Madam:

Borger Management, Inc. is the Managing Agent for the owner of 360 Herndon Parkway. Herndon Animal Medical Center's sign plans have been reviewed and approved. Sign-a-rama has bee contracted by Herndon Animal Medical Center to complete the sign construction and installation.

Please feel free to contact me by email with any questions,
mjborger@borgermanagement.com

Sincerely,

Michael J. Borger
Property Manager
Borger Management, Inc.

Proposed Sign

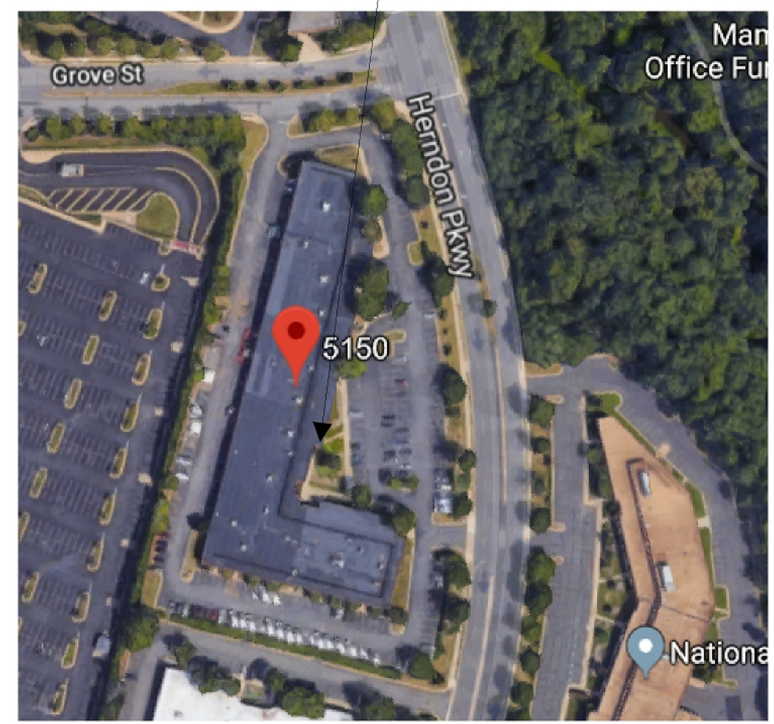

Scale: 1inch = 200ft

Herndon Animal Medical Center
360 Herndon Parkway Suite 2150
Herndon, VA 20170

Herndon Animal Medical Center
360 Herndon Parkway
Suite 2150
Herndon, VA 20170

Herndon Animal Medical Center
360 Herndon Parkway Suite 2150
Herndon VA 20170

Proposed Sign

Proposed Sign

Scale: 1inch = 2.9ft

Herndon Animal Medical Center
360 Herndon Parkway Suite 5150
Herndon VA 20170

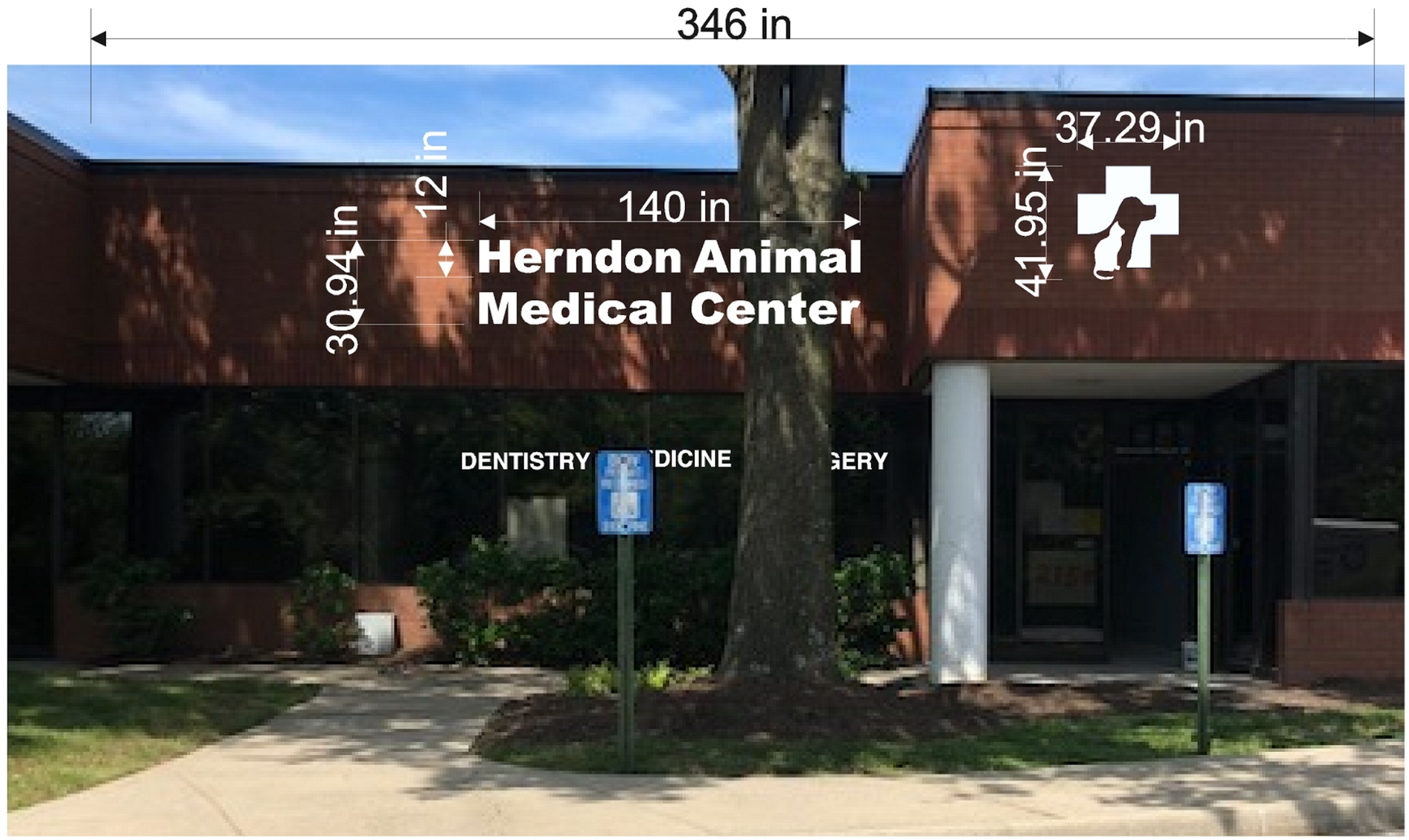

Scale: 1inch = 2.9ft

Herndon Animal Medical Center
360 Herndon Parkway Suite 2150
Herndon VA 20170

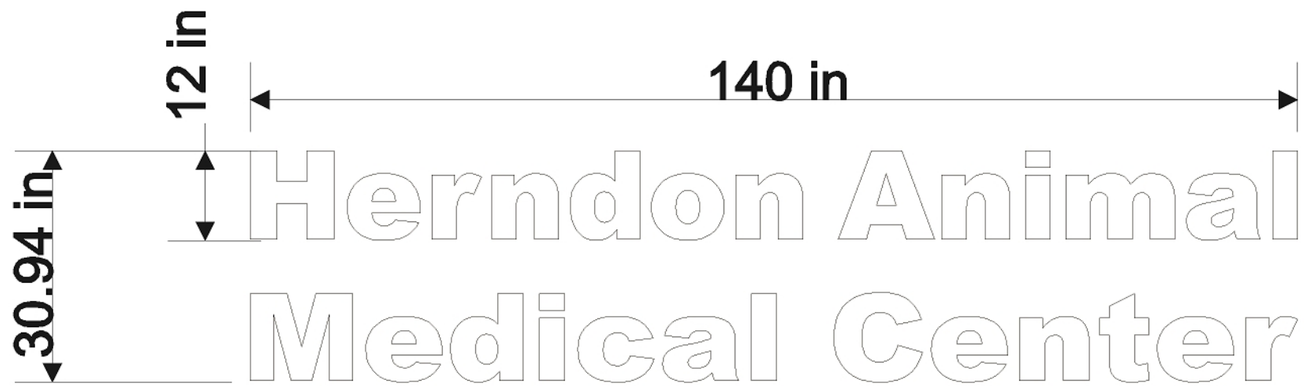

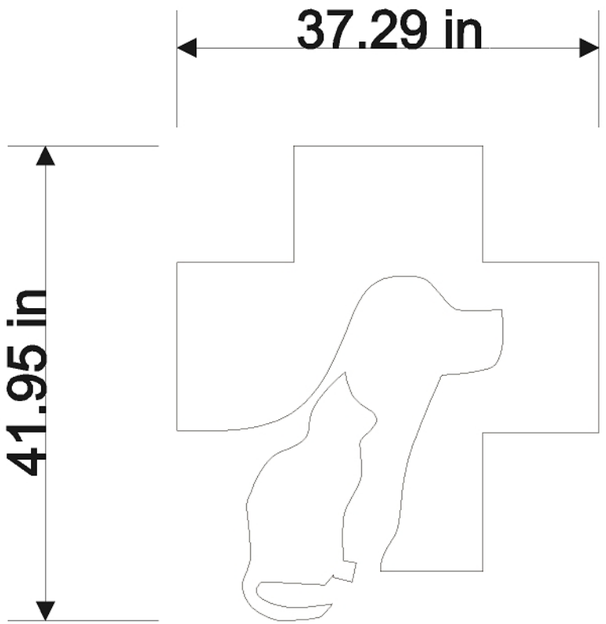

Description:
White Formed Plastic
Dimensional Letters
12" Text Height
Flat Face
1" Depth
Flush Stud Mount

FRONT VIEW II SCALE 1:5

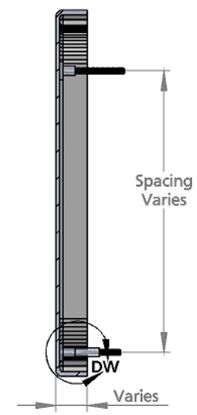

SECTION VIEW A-A II SCALE 1:5

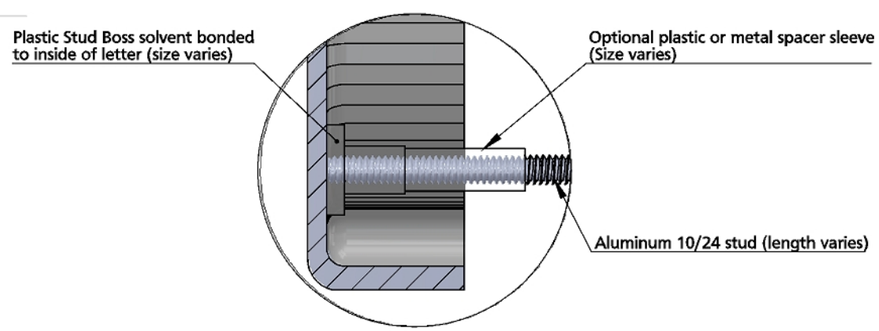

DETAIL DW II SCALE 1:1

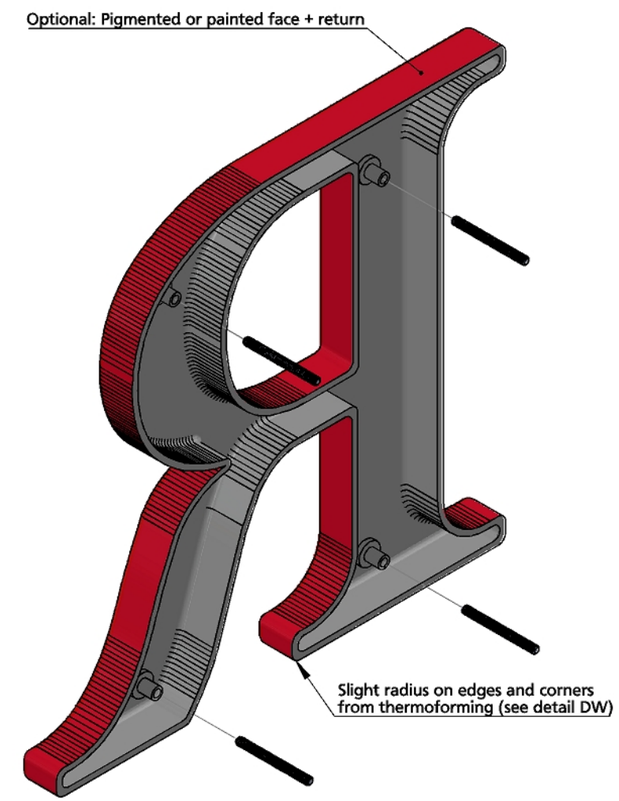

ISOMETRIC BACK VIEW II SCALE 1:3

NOTES:
Typical stud length 2" beyond back of letter

TITLE: FORMED PLASTIC - STUD MOUNT			
MATERIAL: PLASTIC		PRODUCT TYPE: PLASTIC LETTERS	
DWG NO. FORM10	REV 02/24/15	SCALE: AS INDICATED	SHEET 1 OF 1

ARCHITECTURAL REVIEW BOARD STANDARDS FOR DESIGN REVIEW
Taken from ARB Charter – Chapter 58 (Planning) of Herndon Town Code (2000)

DIVISION 4. STANDARDS* _____
***Charter references:** Standards and purpose, § 7.4:1(c). _____

Sec. 58-96. Design criteria.
The board of architectural review and, on appeal, the town council shall use the following standards and criteria in considering applications filed under this article:

(1) Whether or not the proposed architectural design is suitable for a good suburban community in terms of external architectural features, including signs subject to public view, general design and arrangement, texture, color, line, mass, dimension, material and lighting.

(2) Whether or not the proposed structure, building or improvement is compatible with existing well-designed structures, acceptable to the board, in the vicinity and in the town as a whole.

(3) Whether or not, and to what extent, the proposed structure, building or improvement would promote the general welfare and protect the public health, safety and morals by tending to maintain or augment the town's tax base as a whole, generating business activity, maintaining and creating employment opportunity, preserving historical sites and structures and making the town a more attractive and desirable place in which to live.

(4) Whether or not proposed freestanding buildings use the same or architecturally harmonious materials, color, texture and treatment for all exterior walls; and in the case of partially freestanding buildings, whether or not the same or architecturally harmonious materials, color, texture and treatment are used on all portions of all exterior walls exposed to public view.

(5) Whether or not the combination of architectural elements proposed for a structure, building or improvement, in terms of design, line, mass, dimension, color, material, texture, lighting, landscaping and roofline and height conform to accepted architectural principles for permanent buildings as contrasted with engineering standards designed to satisfy safety requirements only; and exhibit external characteristics of demonstrated architecture and aesthetic durability.

(6) Whether or not, in terms of design, material, texture, color, lighting, landscaping, dimension, line, mass or roof line and height, the proposed structure, building or improvement is designed to serve primarily as an advertisement or commercial display, exhibits exterior characteristics likely to deteriorate rapidly, would be of temporary or shortterm architectural or aesthetic acceptability, would be plainly offensive to human sensibilities or would otherwise constitute a reasonable foreseeable detriment to the community.

(Code 1992, § 4-16)

TOWN OF Herndon VIRGINIA

STAFF REPORT
Architectural Review Board
August 2, 2019

Case Number & Type: ARB #19-32; Amendment to an approved application
Case Summary: Revise the elevation materials by reducing the application of a metal panel system and modifying the color applications
Case Location: 533 Herndon Parkway, Courtyard by Marriott

Location Map

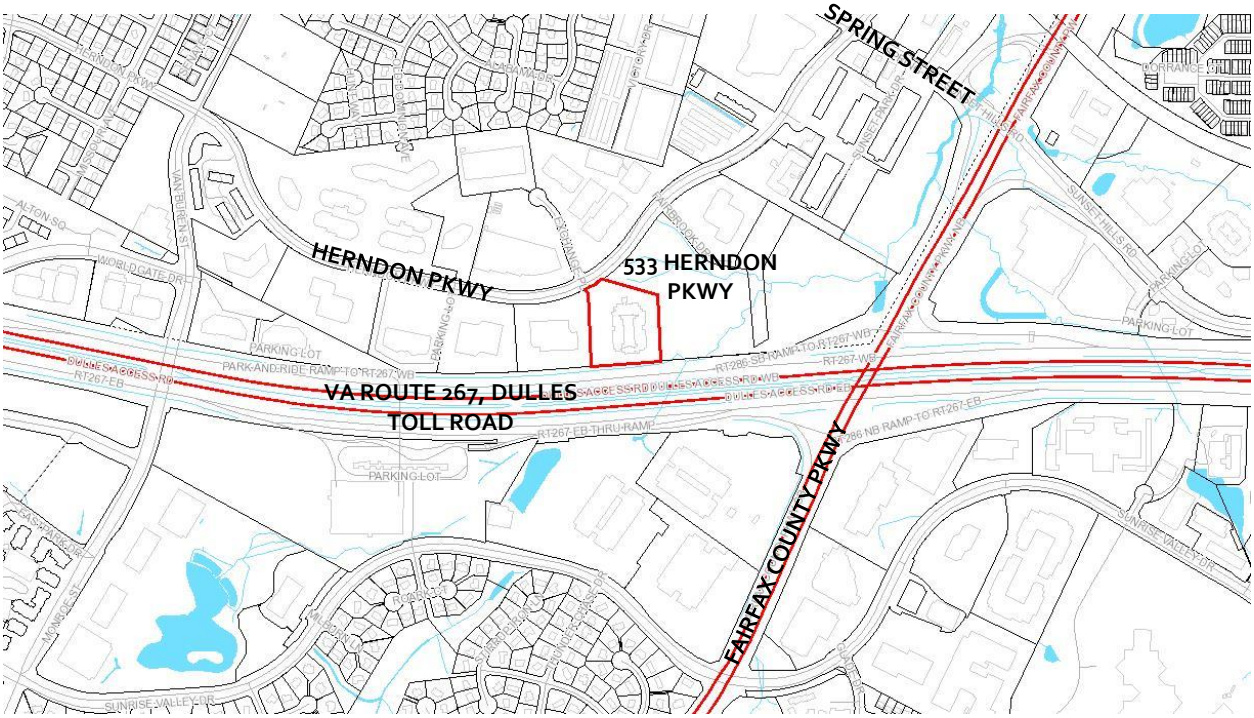

Property Information

Owner / Applicant:	CMP I Herndon Owner, LLC		
Representative:	Dan Norwood, Beacon Bay Project Management		
Business/Organization:	Courtyard by Marriott		
Property Use:	Commercial		
Zoning District:	PD-TOC, Planned Development – Transit Oriented Core		
Adjacent Zoning:	**North:** O&LI - Office and Light Industrial **South:** VA Route 267 Right-of-Way	**East:** O&LI, Office and Light Industrial **West:** PD-TOC, Planned Development – Transit Oriented Core	
Associated Cases:	ARB #19-07, ARB #19-08, ARB #19-09		
Building Type(s):	Three-story, commercial hotel	**Date of Construction:**	1985
Architectural Style(s):	Post-modern, typical suburban commercial design		
Exterior Material(s):	Composite – Extensive painted EIFS, casement windows and sliding glass doors on interior courtyard and exterior facades, planned new storefront entryway		

	and metal panel system surrounding enclosed stairwells, mechanical system shafts and entryway
Neighborhood Design Profile:	Existing commercial office and light industrial

Case Details

Case Description:

The applicant is proposing to amend the design from the previous ARB approval (ARB #19-09) by reducing the use of the Longboard® metal panel system to be installed in a horizontal orientation with a faux wood finish on exterior walls around stairwells enclosures to three stories and around selected exterior entry/exit doors on three exterior primary elevations (East, West, and South). In addition, the application proposes to introduce the new areas of EIFS colored in Benjamin Moore ® Graphite (very dark gray or charcoal color) flat acrylic paint in locations where the metal panel system is proposed for reductions and on the EIFS covering two mechanical shafts on the east and west elevations (Attachments #1, #2, and #3).

Case Background:

The original application proposed several modifications throughout the commercial structure (an existing hotel) to modernize the building and improve its visual appeal.

On the primary street-facing elevation, the north elevation, ARB #19-09 permits the removal of an existing porte cochere and its replacement with a new storefront design that will have aluminum framing, new glazing and a new metal canopy over the storefront and main entrance. Around the entrance storefront, a Longboard® metal panel system, with a faux wood finish, was to be installed in a horizontal orientation. This same metal panel system was to be used on exterior walls around stairwell enclosures from ground to and including the third story, and around selected exterior entry/exit doors on all four exterior primary elevations. A new steel framed wall was to form the new roof parapets.

Approval of ARB #19-09 changed the entire color scheme from neutral beiges and browns to shades of grays and dark browns. The new metal panel system around stairs and entries/exits were to be finished in a Light Natural Walnut color, with EIFS areas around the metal paneling to be Benjamin Moore ® Graphite (very dark gray or a charcoal color) flat acrylic paint. The majority of the exterior EIFS to remain on the exterior and interior courtyard elevations was to be painted, in alternating sections, Benjamin Moore® Hearthstone (dark gray color) and Sherwin Williams® Snowbound (off-white color) in flat acrylic paint.

With clarification of a few design components and site lighting design revised/added to the original application, staff recommended and the Board approved ARB #19-09 as well as the applications for accompanying wall and freestanding signage, ARB #19-07 and ARB #19-08.

Applicable Design Guidelines & Standards:

- Town Code of Ordinances, Section 58-96 Design criteria

- Urban Design and Architectural Guidelines: The Herndon Transit-Oriented Core

Staff Analysis

1. Although permitted on the subject building and a few other buildings within the town, large expanses of EIFS have not been historically found to meet the applicable design criteria within the Town's Architectural Control District, as specified in Section 58-96 of the Town Code of Ordinances (Attachment #4). The proposed amendment retains significantly more EIFS than approved for ARB #19-09. Staff acknowledges the structures existing disposition regarding its existing EIFS surfaces but has significant objections to reducing the amount Longboard® metal panel system for other reasons. In the original case evaluation, staff found that the introduction of the new metal panel system was integral to the updated modern design, which broke up the extensive expanses of EIFS that creates the existing monotonous design for this relatively unadorned structure. Staff concluded the proposed project would improve the visual appeal of this commercial property. Furthermore, the approved design would complement the updated corporate freestanding and wall signage approved through ARB #19-07 and ARB #19-08. Staff believed the proposed building and site improvements would effectively update and modernize, to a limited extent, a now dated and nondescript exterior design.

   Staff's evaluation of the proposed amendment has led to the conclusion that the decrease in the Longboard® metal panel system will detract from the original approved design and will be a return to the less desirable design that exists today. Further, staff has concluded that the proposed amendment is replicating a dated and tired design which decreases the quality of the project, its visual interest and negates the attempt at modernization. As such, the proposed amendment constitutes a return to a much more mundane suburban structure located in, what is becoming, a higher profile and more intensely used transit-oriented development.

2. Staff also consulted the Town of Herndon's *Urban Design and Architectural Guidelines: The Herndon Transit-Oriented Core* (the HTOC Guidelines) in its evaluation. While the HTOC Guidelines set high expectations for good urban design for future redevelopment, certain design guidelines are applicable for existing development, such as the case at hand. In Section C Architectural Guidelines: Materials (page 52-53), the HTOC guidelines discourage the use of EIFS and encourages metal and composite panel systems as appropriate cladding. Staff concludes that the original design approved by the ARB is in keeping with the desire for better urban and architectural design in the HTOC, even on existing structures that one day may be replaced with newer transit-oriented development. Thus, the proposed amendment, which increases the visibility of the less desirable EIFS cladding system, does not conform the HTOC design guidelines.

Staff Recommendation:

Motion Alternatives:	1. Motion to deny the application. 2. Motion to approve the application as submitted. 3. Motion to approve with condition(s).

	4. Motion to continue public hearing to a date certain or the next ARB Public Hearing for action to address a specified design issue or concern of the Board.
Recommended Motion:	Motion for denial of ARB #19-32, in accordance with Alternative #1 due to design issues articulated in the Staff Analysis.

Report Attachments

1.	Aerial Image
2.	ARB #19-09 Building Elevations (as approved)
3.	Revised Elevations & Photos, Renderings
4.	Town's Code of Ordinances Division 4 - Standards, Sec. 58-96. (ARB) Design Criteria

Staff Contact

Name/Title:	**Christopher J. Garcia, Community Design Planner**
Phone/Email:	**(703)787-7380; christopher.garcia@herndon-va.gov**

Christopher J. Garcia
Community Design Planner

Elizabeth M. Gilleran
Director of Community Development

SITE LOCATION – AERIAL PHOTO

Imagery prepared by Town of Herndon
Department of Community Development
Image source: Google Earth © 2018

Attachment #2

4 **WEST ELEVATION - NEW**

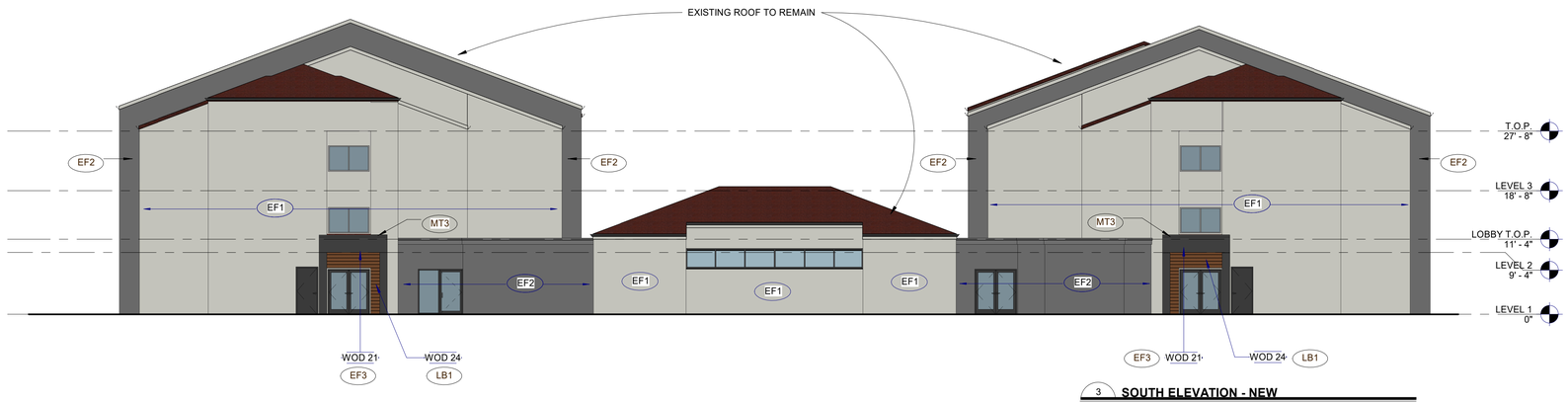

3 **SOUTH ELEVATION - NEW**

2 **EAST ELEVATION - NEW**

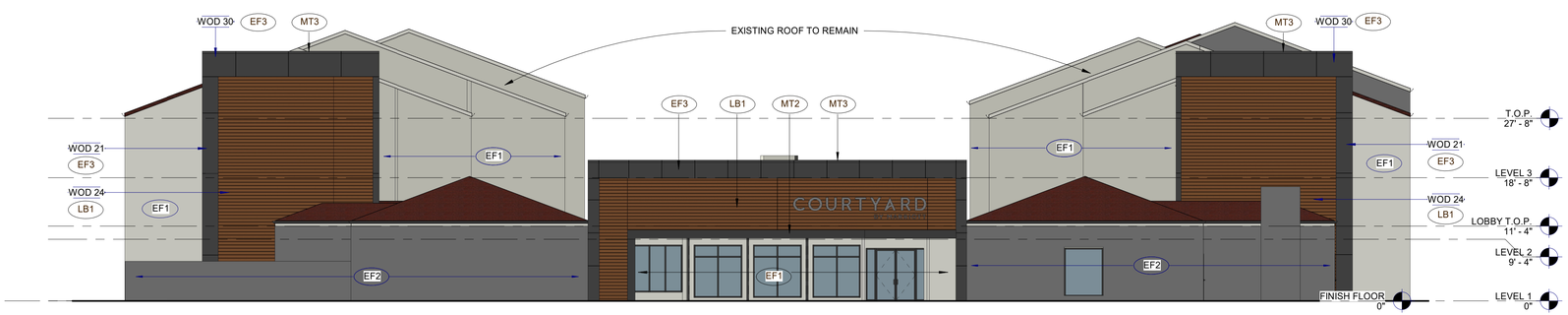

1 **NORTH ELEVATION - NEW**

EXTERIOR FINISH LEGEND

	DESCRIPTION
EF1	PAINT/EIFS SW - 7004 "SNOWBOUND" - ACRYLIC FLAT
EF2	PAINT/EIFS BENJAMIN MOORE 1601 "HEARTHSTONE" - ACRYLIC FLAT
EF3	PAINT/EIFS BENJAMIN MOORE 1603 "GRAPHITE" - ACRYLIC FLAT
LB1	LONGBOARD METAL PANEL 102600/101555 "LIGHT NATIONAL WALNUT"
MT1	METAL MATCH EF1
MT2	METAL MATCH EF2
MT3	METAL MATCH EF3
MT4	METAL MATCH EXISTING STOREFRONT FINISH (DARK BRONZE)
MT5	METAL MATCH LB1
PN1	PAINT SW - 6095 "TOASTY"
PN2	PAINT, METALLIC MATCH MT4
PN3	PAINT, INTUMESCENT MATCH MT4
PN4	PAINT MATCH EF3

GENERAL NOTES

1. NEW EIFS COLORS ARE INTEGRAL TO THE FINISH.
2. EXISTING EIFS COLORS ARE A PAINTED FINISH.
3. ALL LOUVERS, VENTS, GRILLES AND FLASHINGS ARE TO BE PAINTED TO MATCH EXISTING WALL COLOR U.O.N.
4. PAINT ALL ROOFTOP-MOUNTED PAINTABLE DEVICES TO MATCH BUILDING FIELD PAINT. DO NOT PAINT THE ROOFING MATERIAL.
5. MANUFACTURED MASONRY, STONE VENEER AND BRICK TO REMAIN AS-IS U.O.N., PROTECT DURING PAINTING AND CONSTRUCTION.
6. ALL EXISTING DOOR AND WINDOW TRIM TO REMAIN U.O.N.
7. ALL EXTERIOR CAN LIGHTS AND EGRESS LIGHTING TO REMAIN U.O.N.
8. ALL EXTERIOR DECORATIVE BOLLARDS AND HUMAN SCALE LIGHT POSTS TO BE REPLACED, SEE ELECTRICAL DRAWINGS FOR MORE INFORMATION.
9. ALL EXTERIOR OUTLETS AND HOSE BIBS TO REMAIN U.O.N., PROTECT DURING PAINTING AND CONSTRUCTION.
10. PAINT SURFACES OF ACCESS DOORS TO MATCH ADJACENT SURFACES, ENSURE DOOR OPERATION IS MAINTAINED.
11. RE-INSTALL BUILDING ADDRESS NUMBERS AS REQUIRED BY AUTHORITY HAVING JURISDICTION.
12. PROVIDE CONTROL JOINTS IN NEW EIFS PER MANUFACTURER'S INSTRUCTIONS.

EXTERIOR KEYNOTES

WOD 21	NEW EIFS WALL AND PARAPET OVER METAL STUDS, REVEALS AS SHOWN.
WOD 24	INSTALL METAL PANEL SYSTEM PER PLANS AND ELEVATIONS. REFER TO DETAILS FOR MORE INFORMATION.
WOD 25	AT EXISTING CANOPY, METAL PANEL TO SPAN IN FRONT OF EXISTING CANOPY. GUTTER AND DOWNSPOUT TO REMAIN.
WOD 26	AT EXISTING LOUVERED VENT, PAINT TO MATCH ADJACENT METAL PANEL.
WOD 28	NEW ENTRY CANOPY WITH BREAK METAL FASCIA. ROOF INSULATION TO SLOPE TO DRAIN.
WOD 30	AT EXISTING STAIR, INSTALL NEW PARAPET AND OVERFRAMING. REMOVE EXISTING ROOFING AND SHEATHING. INSTALL OVERFRAMING. ROOF INSULATION TO SLOPE TO DRAIN. SEE STRUCTURAL FOR MORE INFORMATION.
WOD 32	PAINT EXISTING STUCCO WALL PER ELEVATIONS. REPAIR, CLEAN AND PREP FOR NEW PAINT.
WOD 36	NEW PARTIAL HEIGHT WOOD STUD EXTERIOR FURRED WALL. EIFS FINISH PER ELEVATIONS.

GRAPHIC SCALE

0' 16' 32' 64'

SYMBOL LEGEND

- 01 DOOR TAG
- 1t WINDOW TAG
- ? FINISH TAG
- XXX-000 ACCESSORY TAG
- 1i WALL TAG
- ? KEYNOTE TAG
- - ALTERNATE BID KEYNOTE TAG
- 1 REVISION TAG
- DEMOLISHED AREA/ITEM
- EXISTING AREA/ITEM
- NEW CONSTRUCTION
- 0" ELEVATION

PERMIT SET

JEFFREY A. WILLIAMS AIA
ARCHITECT
15200 52nd Ave. South
Suite 300
Seattle, WA 98188
Phone 206.766.8300

COMMONWEALTH OF VIRGINIA
JEFFREY A. WILLIAMS
Lic. No. 18280
ARCHITECT

Rev#	Date	Description

ISSUE DATE: 01/10/2019

COURTYARD BY MARRIOTT RENOVATION HERNDON, VA

COLONY CAPITAL

533 HERNDON PKWY
HERNDON, VA 20170
(703) 478-9400

COURTYARD BY MARRIOTT

PROJECT #:	1736.09
DRAWN BY:	JG/AB
CHECKED BY:	EHT

EXTERIOR ELEVATIONS

P200

FILE NAME: Y:\Users\Jamie GICY Herndon_Exterior Renovation_Central_2019_jamiegilmore104.rvt

Attachment #3

JEFFREY A. WILLIAMS AIA
ARCHITECT
15200 52nd Ave. South
Suite 300
Seattle, WA 98188
Phone 206.766.8300

4 WEST ELEVATION - NEW

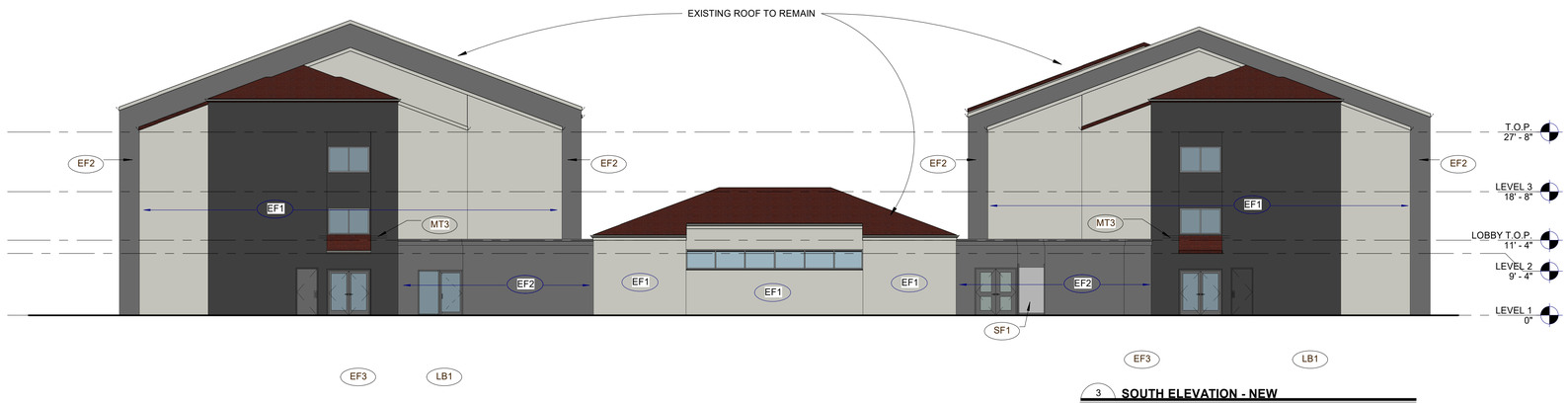

3 SOUTH ELEVATION - NEW

2 EAST ELEVATION - NEW

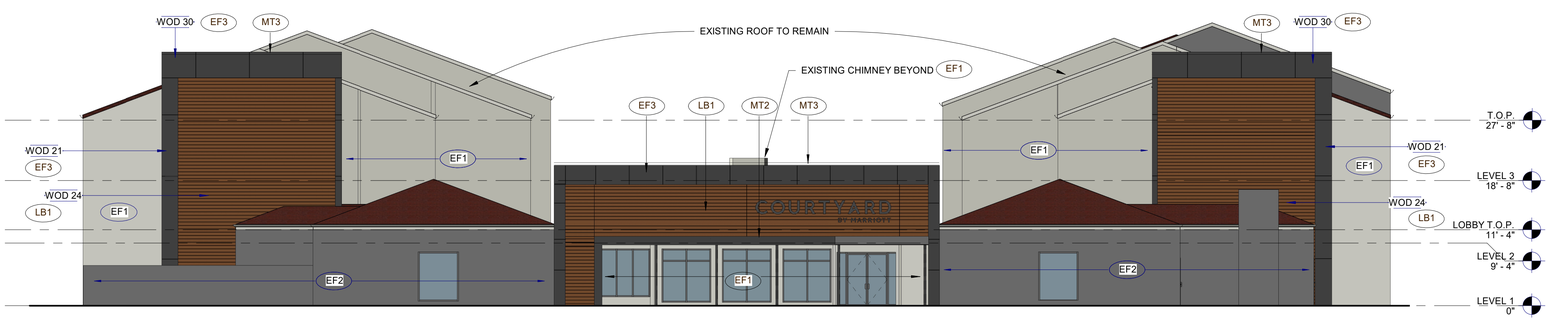

1 NORTH ELEVATION - NEW

EXTERIOR FINISH LEGEND

	DESCRIPTION
EF1	PAINT/EIFS SW - 7004 "SNOWBOUND" - ACRYLIC FLAT
EF2	PAINT/EIFS BENJAMIN MOORE 1601 "HEARTHSTONE" - ACRYLIC FLAT
EF3	PAINT/EIFS BENJAMIN MOORE 1603 "GRAPHITE" - ACRYLIC FLAT
LB1	LONGBOARD METAL PANEL 102600/101555 "LIGHT NATIONAL WALNUT"
MT1	METAL MATCH EF1
MT2	METAL MATCH EF2
MT3	METAL MATCH EF3
MT4	METAL MATCH EXISTING STOREFRONT FINISH (DARK BRONZE)
MT5	METAL MATCH LB1
PN1	PAINT SW - 6095 "TOASTY"
PN2	PAINT, METALLIC MATCH MT4
PN3	PAINT, INTUMESCENT MATCH MT4
PN4	PAINT MATCH EF3
SF1	CHAIN LINK FENCE PLASTIC SLATS COLOR GRAY

GENERAL NOTES

1. NEW EIFS COLORS ARE INTEGRAL TO THE FINISH.
2. EXISTING EIFS COLORS ARE A PAINTED FINISH.
3. ALL LOUVERS, VENTS, GRILLES AND FLASHINGS ARE TO BE PAINTED TO MATCH EXISTING WALL COLOR U.O.N.
4. PAINT ALL ROOFTOP-MOUNTED PAINTABLE DEVICES TO MATCH BUILDING FIELD PAINT. DO NOT PAINT THE ROOFING MATERIAL.
5. MANUFACTURED MASONRY, STONE VENEER AND BRICK TO REMAIN AS-IS U.O.N., PROTECT DURING PAINTING AND CONSTRUCTION.
6. ALL EXISTING DOOR AND WINDOW TRIM TO REMAIN U.O.N.
7. ALL EXTERIOR CAN LIGHTS AND EGRESS LIGHTING TO REMAIN U.O.N.
8. ALL EXTERIOR DECORATIVE BOLLARDS AND HUMAN SCALE LIGHT POSTS TO BE REPLACED, SEE ELECTRICAL DRAWINGS FOR MORE INFORMATION.
9. ALL EXTERIOR OUTLETS AND HOSE BIBS TO REMAIN U.O.N., PROTECT DURING PAINTING AND CONSTRUCTION.
10. PAINT SURFACES OF ACCESS DOORS TO MATCH ADJACENT SURFACES, ENSURE DOOR OPERATION IS MAINTAINED.
11. RE-INSTALL BUILDING ADDRESS NUMBERS AS REQUIRED BY AUTHORITY HAVING JURISDICTION.
12. PROVIDE CONTROL JOINTS IN NEW EIFS PER MANUFACTURER'S INSTRUCTIONS.

EXTERIOR KEYNOTES

WOD 21	NEW EIFS WALL AND PARAPET OVER METAL STUDS, REVEALS AS SHOWN.
WOD 24	INSTALL METAL PANEL SYSTEM PER PLANS AND ELEVATIONS. REFER TO DETAILS FOR MORE INFORMATION.
WOD 25	AT EXISTING CANOPY, METAL PANEL TO SPAN IN FRONT OF EXISTING CANOPY.
WOD 26	AT EXISTING LOUVERED VENT, PAINT TO MATCH ADJACENT METAL PANEL.
WOD 28	NEW ENTRY CANOPY WITH BREAK METAL FASCIA.
WOD 30	AT EXISTING STAIR, INSTALL NEW PARAPET AND OVERFRAMING. REMOVE EXISTING ROOFING AND SHEATHING. INSTALL OVERFRAMING. ROOF INSULATION TO SLOPE TO DRAIN. SEE STRUCTURAL FOR MORE INFORMATION.
WOD 32	PAINT EXISTING STUCCO WALL PER ELEVATIONS. REPAIR, CLEAN AND PREP FOR NEW PAINT.
WOD 36	NEW PARTIAL HEIGHT WOOD STUD EXTERIOR FURRED WALL. EIFS FINISH PER ELEVATIONS.

GRAPHIC SCALE

0' 16' 32' 64'

SYMBOL LEGEND

- 01 DOOR TAG
- 1t WINDOW TAG
- ? FINISH TAG
- XXX-000 ACCESSORY TAG
- 1i WALL TAG
- ? KEYNOTE TAG
- - ALTERNATE BID KEYNOTE TAG
- 1 REVISION TAG
- DEMOLISHED AREA/ITEM
- EXISTING AREA/ITEM
- NEW CONSTRUCTION
- 0" ELEVATION

Rev#	Date	Description

ISSUE DATE: 01/10/2019

COURTYARD BY MARRIOTT RENOVATION HERNDON, VA

COLONY CAPITAL

533 HERNDON PKWY
HERNDON, VA 20170
(703) 478-9400

COURTYARD BY MARRIOTT

PROJECT #:	1736.09
DRAWN BY:	JG/AB
CHECKED BY:	EHT

EXTERIOR ELEVATIONS

P200

PERMIT SET

FILE NAME: P:\Hospitality\1736 - NorthStar\1736.09 CY - Herndon - VA_Lobby\04 Revit\CY Herndon_Exterior Renovation_Central_2 LEVEL_VE.rvt

COURTYARD
BY MARRIOTT

COURTYARD
BY MARRIOTT

ARCHITECTURAL REVIEW BOARD STANDARDS FOR DESIGN REVIEW
Taken from ARB Charter – Chapter 58 (Planning) of Herndon Town Code (2000)

DIVISION 4. STANDARDS* _____
***Charter references:** Standards and purpose, § 7.4:1(c). _____

Sec. 58-96. Design criteria.
The board of architectural review and, on appeal, the town council shall use the following standards and criteria in considering applications filed under this article:

(1) Whether or not the proposed architectural design is suitable for a good suburban community in terms of external architectural features, including signs subject to public view, general design and arrangement, texture, color, line, mass, dimension, material and lighting.

(2) Whether or not the proposed structure, building or improvement is compatible with existing well-designed structures, acceptable to the board, in the vicinity and in the town as a whole.

(3) Whether or not, and to what extent, the proposed structure, building or improvement would promote the general welfare and protect the public health, safety and morals by tending to maintain or augment the town's tax base as a whole, generating business activity, maintaining and creating employment opportunity, preserving historical sites and structures and making the town a more attractive and desirable place in which to live.

(4) Whether or not proposed freestanding buildings use the same or architecturally harmonious materials, color, texture and treatment for all exterior walls; and in the case of partially freestanding buildings, whether or not the same or architecturally harmonious materials, color, texture and treatment are used on all portions of all exterior walls exposed to public view.

(5) Whether or not the combination of architectural elements proposed for a structure, building or improvement, in terms of design, line, mass, dimension, color, material, texture, lighting, landscaping and roofline and height conform to accepted architectural principles for permanent buildings as contrasted with engineering standards designed to satisfy safety requirements only; and exhibit external characteristics of demonstrated architecture and aesthetic durability.

(6) Whether or not, in terms of design, material, texture, color, lighting, landscaping, dimension, line, mass or roof line and height, the proposed structure, building or improvement is designed to serve primarily as an advertisement or commercial display, exhibits exterior characteristics likely to deteriorate rapidly, would be of temporary or shortterm architectural or aesthetic acceptability, would be plainly offensive to human sensibilities or would otherwise constitute a reasonable foreseeable detriment to the community.

(Code 1992, § 4-16)