TOWN OF HERNDON, VIRGINIA

ARCHITECTURAL REVIEW BOARD
PUBLIC HEARING AGENDA
JULY 21, 2021
HERNDON COUNCIL CHAMBERS BUILDING
765 LYNN STREET
7:30 P.M.

The meeting is being held electronically pursuant to Virginia Code Section 2.2-3708.2, as amended; and in accordance with Ordinance 20-O-23, Continuity of Governmental Operations during Pandemic Disaster (COVID-19), as amended and readopted by the Herndon Town Council on September 8, 2020, which superseded previously adopted amendments. Individuals are encouraged to submit written comments for the record to hdrb.arb@herndon-va.gov .

CALL TO ORDER

1. Roll Call
2. Determination of Quorum

APPROVAL OF MINUTES

3. June 2, 2021 Work Session Draft Minutes

4. June 16, 2021 Public Hearing Draft Minutes

COMMENTS

5. Comments from the Board Members

6. Comments from the Staff Members

PUBLIC HEARINGS

7. **APPLICATION FOR A BUILDING ALTERATION, ARB #21-009,** to consider an application to modify a rooftop telecommunications facility and screen wall on an office building located at 575 Herndon Parkway, Herndon, Virginia, approximately a quarter mile east of the intersection of Worldgate Drive and Van Buren Street, and further identified as Fairfax County Tax Map 0164-10-0006. The property is zoned PD-TOC, Planned Development-Transit Oriented Core and consists of 205,041 square feet of land. Owner: Bristol Herndon Parkway, LLC. Applicant: Katherine Blackwood, Network Building + Consulting.

8. **APPLICATION FOR A WALL SIGN, ARB #21-010,** to consider an application to install a tenant wall sign on the multi-tenant office building located at 12930 Worldgate Drive, Herndon, Virginia, approximately one third of a mile east of the intersection of Worldgate Drive and Centreville Road, and further identified as Fairfax County Tax Map 0163-02-0028C. The property is zoned PD-W, Planned Development-Worldgate, and consists of 126,575 square feet of land. Owner: Monument III Owner, LLC. Applicant: George Marino, Service Neon Signs, Inc.

ADJOURNMENT

TOWN OF Herndon VIRGINIA

STAFF REPORT
Architectural Review Board
July 7, 2021

Title: ARB #21-009; Building Alteration; 575 Herndon Parkway

Staff Contact: Bryce A. Perry
Deputy Director of Community Development
bryce.perry@herndon-va.gov
(703) 787-7380

Summary Information

Applicant Request	Alterations to rooftop telecommunications facilities		
Address	575 Herndon Parkway		
Fairfax County Tax Map Number	0164-10-0006		
Owner	Bristol Herndon Parkway, LLC.		
Applicant	Katherine Blackwood, Network Building + Consulting		
Business/Organization	Sprint		
Property Use	Office		
Zoning District	PD-TOC; Planned Development-Transit Oriented Core		
Adjacent Zoning	**North:** O&LI; Office & Light Industrial **South:** PD-TOC; Planned Development-Transit Oriented Core	**East:** PD-TOC; Planned Development-Transit Oriented Core **West:** PD-TOC; Planned Development-Transit Oriented Core	
Building Type(s)	Multi-story office building	**Date of Construction:**	1988
Architectural Style(s)	Post-modern		
Exterior Material(s)	Brick, glass		
Neighborhood Design Profile	Low and mid-rise office buildings and new multi-family		
Comprehensive Plan Land Use Designation	Regional Corridor Mixed Use		

Staff Recommendation	Staff is recommending approval in accordance with the draft resolution (Attachment #1)

Case Details

Proposal:

This application proposes to modify an existing rooftop screen wall, replace and add new antennas, and install several new cabinets and other various telecommunications equipment within the proposed enclosure. The ARB review is limited to the screen wall changes and the new antennas installed outside the wall.

The existing metal screen wall would remain in its existing location, centered at the building mid-point, however 6' will be added to its height. The extension will match the color and material of the existing metal wall. The added height would more effectively screen both existing and new equipment installed within the enclosure. It is also designed to closely align with the height of the proposed wall-mounted antennas. Nine panel antennas are proposed to be installed on the outside of the extended screen wall facing both the front and the rear of the building. The design of the screen wall and antennas are provided in this report as Attachments #2 and #3.

Site Description:
This parcel is flat and one of the closet properties to the Herndon Metro Station. It is improved with the multi-story office building and surface parking. The access walkway to the metro station immediately abuts its western boundary and the Dulles Toll Road immediately abuts its southern boundary. It fronts and is accessible from Herndon Parkway to the north. The surrounding area is mostly comprised of low and mid-rise office buildings. The map below provides context to the site location.

Location Map

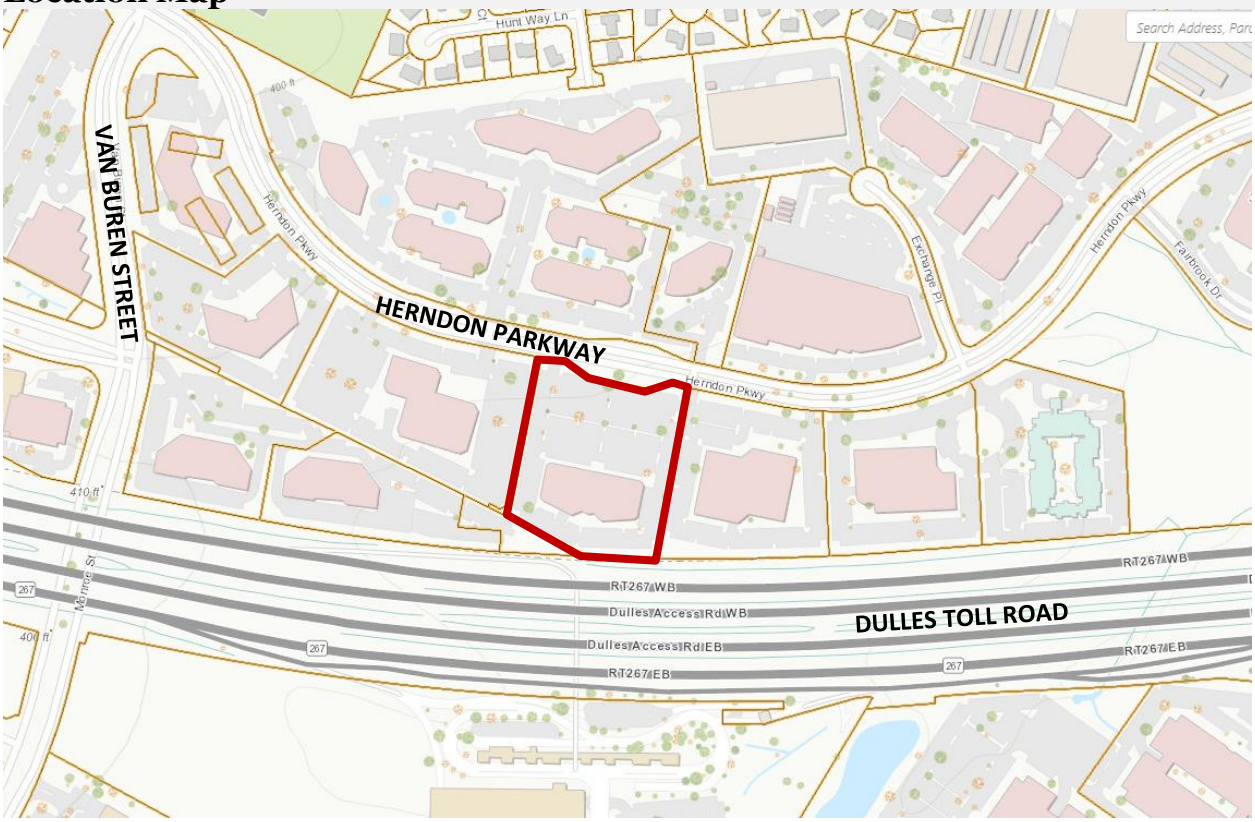

Applicable Design Guidance:

- Town Code of Ordinances, Section 58-96 – *Design criteria* (Attachment #4)

Staff Analysis

1. Staff has found that the proposed alterations meets the applicable standards and requirements of the Town of Herndon Zoning Ordinance.

2. With the findings expressed below, staff believes the proposed sign generally complies with the applicable design criteria within the Town's Architectural Control District as specified in Section 58-96 of the Town Code of Ordinances (Attachment #4).

    a. The enlargement of the screen wall has a visual impact with the increased mass however it is suitably managed by maintaining the existing screen wall shape and location and matching the existing screen wall material. From street level, the increased height will not present as large a form that has been provided in the photo simulations.
    b. The enlarged screen wall will shield both existing and new telecommunications equipment from view, providing an architectural solution to what is seen today as a collection of various antennas and radios of differing sizes.
    c. The antennas and associated equipment installed on the proposed screen wall are shown in the drawings as finished to match the screen wall color to minimize their appearance. Staff supports this approach but believes without more specificity in the submission a condition requiring the appropriate camouflage is necessary. The following staff comment further addresses this.

3. The material submitted do not clearly indicated how the antennas will be effectively colored to match the screen wall surface. Staff recommends a condition in the resolution more directly requiring that all equipment including mounting brackets and conduits be painted and maintained to match the color of the surface on which they are attached.

Staff Recommendation:

ARB Alternatives:	1. Resolution to deny the application. 2. Resolution to approve the application as submitted. 3. Resolution to approve with condition(s). 4. The ARB may also continue the review of this item to a future public hearing
Staff Recommendation:	Staff is recommending approval in accordance with Alternative #3 and the draft resolution (Attachment #1)

Report Attachments

1.	ARB #21-009 Draft Resolution
2.	Proposed Drawings & Plans
3.	Photo Simulations
4.	Town's Zoning Ordinance, Section 78-60.3.

Staff Signatures

Bryce A. Perry
Deputy Director of Community Development

TOWN OF HERNDON, VIRGINIA
ARCHITECTURAL REVIEW BOARD

DRAFT RESOLUTION

July 21, 2021

Resolution- to approve ARB #21-009, for alteration of rooftop telecommunications equipment and an enclosure located at 575 Herndon Parkway, Fairfax County Tax Map Number 0164-10-0006.

WHEREAS, the applicant has submitted an application to alter rooftop telecommunications equipment and an enclosure located the above referenced address; and

WHEREAS, the proposed alterations comply with the applicable zoning ordinance regulations as specified in the Town of Herndon Zoning Ordinance; and

WHEREAS, the Town of Herndon Architectural Review Board has determined that the proposed alterations comply with the applicable Design Criteria as stated in the Town of Herndon Code of Ordinances Section 58-96; and

WHEREAS, the Town of Herndon Architectural Review Board has reviewed this application and has held a duly advertised public hearing on July 21, 2021.

NOW THEREFORE, BE IT RESOLVED that the Architectural Review Board of the Town of Herndon, Virginia, HEREBY:

Approves ARB #21-009, for alteration of rooftop telecommunications equipment and an enclosure located at 575 Herndon Parkway in Herndon, VA in substantial conformance with the design as shown in case materials reviewed by the ARB and according to the following condition:

1. All antennas, radios, and associated equipment including mounting brackets and conduits, placed outside the screen wall, be painted and maintained to match the color of screen wall.

Attachment #2

NOTE TO GENERAL CONTRACTOR:
REFER TO THE PASSING STRUCTURAL ANALYSIS AND APPLICABLE MOUNT ANALYSIS OF THE EXISTING BUILDING CONSIDERING THE EXISTING AND PROPOSED LOADS PERFORMED BY NB+C ES (PROJECT 100249). IF ANY DISCREPANCIES ARE FOUND, THE CONTRACTOR SHALL IMMEDIATELY NOTIFY THE ENGINEER IN WRITING.

DESIGN BASED ON RFDS VERSION: 1 DATED: 02/01/21.

Sprint

SITE NUMBER: 7WAC531A
SITE CASCADE: WA23XC350
SPRINT KEEP INSTALLATION, DESIGN 67D5A97DB_B25

575 HERNDON PARKWAY
HERNDON, VA 20170
TOWN OF HERNDON

SCOPE OF WORK

PROJECT CONSISTS OF:

REMOVING:
(6) EXISTING ANTENNAS
(9) EXISTING RADIOS
(3) EXISTING COMBINERS
(2) EXISTING JUNCTION BOXES
ALL EXISTING MOUNTS
ALL EXISTING COAX/CABLES

EXISTING TO REMAIN
(2) EXISTING MICROWAVE DISHES
(2) EXISTING ETHERNET CABLES
(2) EXISTING MICROWAVE CABINETS
(3) EXISTING MICROWAVE ODUS

INSTALLING:
(9) PROPOSED ANTENNAS
(6) PROPOSED RADIOS
(3) PROPOSED 6X24 HYBRID CABLES
(2) PROPOSED CABINETS
(11) PROPOSED MOUNTS
PROPOSED CABLE TRAY SECTION
PROPOSED SCREEN WALL EXTENSION

SITE INFORMATION

LATITUDE (NAD 83):	38.95385742°
LONGITUDE (NAD 83):	-77.38357544°
JURISDICTION:	TOWN OF HERNDON
ZONING:	PD-TOC
APN:	0164-10-0006
PARCEL AREA:	4.71± ACRES
PARCEL OWNER:	BRISTOL HERNDON PARKWAY LLC
ADDRESS:	7500 OLD GEORGETOWN RD #760 BETHESDA MD 20814-6816
GROUND ELEVATION:	390.0' (AMSL)
STRUCTURE TYPE:	ROOF TOP
STRUCTURE HEIGHT:	69.0' (AGL)

PROJECT TEAM

APPLICANT:	APC REALTY AND EQUIPMENT COMPANY, LLC MAILSTOP KSOPHD0101-Z2650 6220 SPRINT PARKWAY OVERLAND PARK, KS 66251 (855) 848-3280
PROJECT MANAGEMENT FIRM:	NETWORK BUILDING + CONSULTING, LLC. 6095 MARSHALEE DRIVE, SUITE 300 ELKRIDGE, MD 21075 (410) 712-7092
ENGINEERING FIRM:	NB+C ENGINEERING SERVICES, LLC. 6095 MARSHALEE DRIVE, SUITE 300 ELKRIDGE, MD 21075 (410) 712-7092 MARCO GROTTI MGROTTI@NBCLLC.COM (410) 712-7092 - EXT 1032

VICINITY MAP

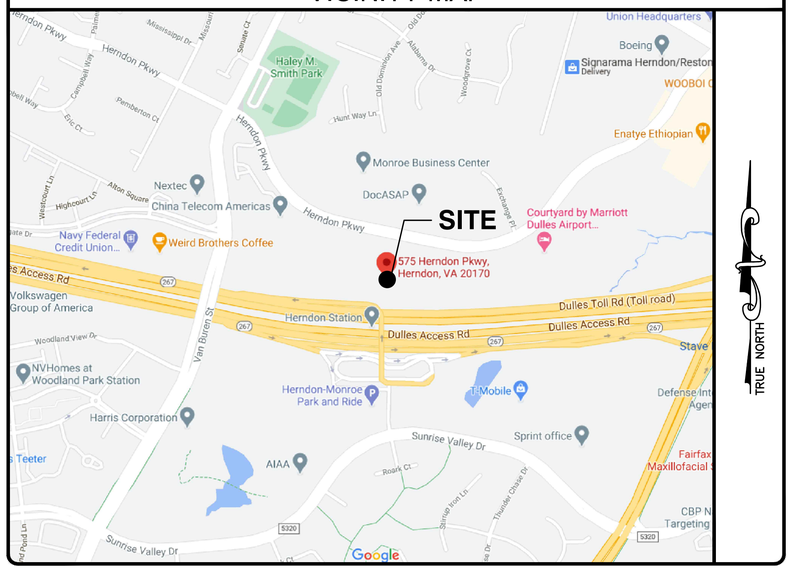

CODE COMPLIANCE

ALL WORK AND MATERIALS SHALL BE PERFORMED AND INSTALLED IN ACCORDANCE WITH THE CURRENT EDITIONS OF THE FOLLOWING CODES AS ADOPTED BY THE LOCAL GOVERNING AUTHORITIES. NOTHING IN THESE PLANS IS TO BE CONSTRUED TO PERMIT WORK NOT CONFORMING TO THE LATEST EDITIONS OF THE FOLLOWING CODES.

- 2015 VIRGINIA UNIFORM STATEWIDE BUILDING CODE (USBC)
- 2014 NATIONAL ELECTRICAL CODE
- 2015 NFPA 101, LIFE SAFETY CODE
- 2015 STATEWIDE FIRE PREVENTION CODE
- 2015 INTERNATIONAL BUILDING CODE(IBC)
- AMERICAN CONCRETE INSTITUTE
- AMERICAN INSTITUTE OF STEEL CONSTRUCTION
- MANUAL OF STEEL CONSTRUCTION 13TH EDITION
- ANSI/TIA-222-H
- TIA 607
- INSTITUTE FOR ELECTRICAL & ELECTRONICS ENGINEER 81
- IEEE C2 NATIONAL ELECTRIC SAFETY CODE LATEST EDITION
- TELCORDIA GR-1275
- ANSI/T 311
- FAIRFAX STRUCTURAL DESIGN LOADS AND RELATED FACTORS
  - GROUND SNOW LOAD = 25 PSF
  - BASIC WIND SPEED = 90 MPH
  - EARTHQUAKE SPECTRAL RESPONSE ACCELERATIONS SS = 0.16 AND S1 = 0.053

DRAWING INDEX

T-1	TITLE SHEET
GN-1	GENERAL NOTES
SP-1	SITE PLAN
C-1	ROOFTOP PLAN
C-2	EQUIPMENT PLANS
C-3	SOUTH ELEVATION
C-4	NORTH ELEVATION
A-1	ANTENNA SCHEDULE
A-2	ANTENNA PLANS
A-3	ANTENNA SPECIFICATIONS & DETAILS
A-4	EQUIPMENT SPECIFICATIONS & DETAILS
A-5	PLUMBING DIAGRAM & CABLING DETAIL
E-1	ELECTRICAL DETAILS
G-1	GROUNDING DETAILS
ST-1	ANTENNA MOUNTING DETAILS

DO NOT SCALE DRAWINGS

THESE DRAWINGS ARE FORMATTED TO BE FULL-SIZE AT 22"X34". CONTRACTOR SHALL VERIFY ALL PLANS AND EXISTING DIMENSIONS AND CONDITIONS ON THE JOB SITE AND SHALL IMMEDIATELY NOTIFY THE DESIGNER / ENGINEER IN WRITING OF ANY DISCREPANCIES BEFORE PROCEEDING WITH THE WORK OR MATERIAL ORDERS OR BE RESPONSIBLE FOR THE SAME. CONTRACTOR SHALL USE BEST MANAGEMENT PRACTICE TO PREVENT STORM WATER POLLUTION DURING CONSTRUCTION.

811 Know what's below. Call before you dig.

VIRGINIA ONE CALL SYSTEM, INC. 1-800-552-7001 STOP-CALL BEFORE YOU DIG!

VIRGINIA LAW REQUIRES THREE WORKING DAYS NOTICE PRIOR TO ANY EARTH MOVING ACTIVITIES

APPLICANT

Sprint
NOW APART OF T-Mobile
T-MOBILE NORTHEAST LLC
APC REALTY AND EQUIPMENT COMPANY, LLC
6220 SPRINT PARKWAY
OVERLAND PARK, KS 66251
(855) 848-3280

ENGINEER

NB+C TOTALLY COMMITTED
NB+C ENGINEERING SERVICES, LLC.
6095 MARSHALEE DRIVE, SUITE 300
ELKRIDGE, MD 21075
(410) 712-7092

SITE INFORMATION

7WAC531A
NTM REPL FOR WA23XC350
575 HERNDON PARKWAY
HERNDON, VA 20170
TOWN OF HERNDON

DESIGN RECORD

REVISIONS

REV	DATE	DESCRIPTION	BY
1	05/24/21	REV PER SCREEN WALL	AMM
0	03/31/21	FINAL CD'S	DH

PROFESSIONAL STAMP

STATE OF MARYLAND 55491 PROFESSIONAL ENGINEER 05/19/21

PROFESSIONAL CERTIFICATION. I HEREBY CERTIFY THAT THESE DOCUMENTS WERE PREPARED OR APPROVED BY ME, AND THAT I AM A DULY LICENSED PROFESSIONAL ENGINEER UNDER THE LAWS OF THE STATE OF MARYLAND, LICENSE NO. 55491, EXPIRATION DATE 01/08/2022

ENGINEER

TRENT TRAVIS SNARR, P.E.
MARYLAND PROFESSIONAL ENGINEER
LICENSE #55491

SHEET TITLE

TITLE SHEET

SHEET NUMBER

T-1

ELECTRICAL & GROUNDING NOTES

1. ALL ELECTRICAL WORK SHALL CONFORM TO THE REQUIREMENTS OF THE NATIONAL ELECTRICAL CODE (NEC) AS WELL AS APPLICABLE STATE AND LOCAL CODES.
2. ALL ELECTRICAL ITEMS SHALL BE U.L. APPROVED OR LISTED AND PROCURED PER SPECIFICATION REQUIREMENTS.
3. THE ELECTRICAL WORK INCLUDES ALL LABOR AND MATERIAL DESCRIBED BY DRAWINGS AND SPECIFICATION INCLUDING INCIDENTAL WORK TO PROVIDE COMPLETE OPERATING AND APPROVED ELECTRICAL SYSTEM.
4. GENERAL CONTRACTOR SHALL PAY FEES FOR PERMITS, AND IS RESPONSIBLE FOR OBTAINING SAID PERMITS AND COORDINATION OF INSPECTIONS.
5. ELECTRICAL AND TELCO WIRING AT EXPOSED INDOOR LOCATIONS SHALL BE IN ELECTRICAL METALLIC TUBING OR RIGID NONMETALLIC TUBING (RIGID SCHEDULE 40 PVC OR RIGID SCHEDULE 80 PVC FOR LOCATIONS SUBJECT TO PHYSICAL DAMAGE) (AS PERMITTED BY CODE).
6. ELECTRICAL AND TELCO WIRING AT CONCEALED INDOOR LOCATIONS SHALL BE IN ELECTRICAL METALLIC TUBING, ELECTRICAL NONMETALLIC TUBING, OR RIGID NONMETALLIC TUBING (RIGID SCHEDULE 40 PVC AS PERMITTED BY CODE).
7. ELECTRICAL AND TELCO WIRING OUTSIDE A BUILDING, ABOVE GRADE AND EXPOSED TO WEATHER SHALL BE IN WATER TIGHT GALVANIZED RIGID STEEL CONDUITS (RGS) AND WHERE REQUIRED IN LIQUID TIGHT FLEXIBLE METAL OR NONMETALLIC CONDUITS.
8. BURIED CONDUIT SHALL BE RIGID NONMETALLIC CONDUIT (RIGID SCHEDULE 40 PVC); DIRECT BURIED IN AREAS OF OCCASIONAL LIGHT TRAFFIC, ENCASED IN REINFORCED CONCRETE IN AREAS OF HEAVY TRAFFIC.
9. LIQUID–TIGHT FLEXIBLE METALLIC CONDUIT SHALL BE USED INDOORS AND OUTDOORS IN AREAS WHERE VIBRATION OCCURS AND FLEXIBILITY IS NEEDED.
10. ELECTRICAL WIRING SHALL BE COPPER WITH TYPE THHN, THWN–2, OR THIN INSULATION.
11. RUN ELECTRICAL CONDUIT OR CABLE BETWEEN ELECTRICAL UTILITY DEMARCATION POINT AND PROJECT OWNER CELL SITE PPC AS INDICATED ON THIS DRAWING. PROVIDE FULL LENGTH PULL ROPE. COORDINATE INSTALLATION WITH UTILITY COMPANY.
12. RUN TELCO CONDUIT OR CABLE BETWEEN TELEPHONE UTILITY DEMARCATION POINT AND PROJECT OWNER CELL SITE TELCO CABINET AND BTS CABINET AS INDICATED ON THIS DRAWING. PROVIDE FULL LENGTH PULL ROPE IN INSTALLED TELCO CONDUIT. PROVIDE GREENLEE CONDUIT MEASURING TAPE AT EACH END.
13. ALL EQUIPMENT LOCATED OUTSIDE SHALL HAVE NEMA 3R ENCLOSURE.
14. GROUNDING SHALL COMPLY WITH NEC ART. 250. ADDITIONALLY, GROUNDING, BONDING AND LIGHTING PROTECTION SHALL BE DONE IN ACCORDANCE WITH T–MOBILE CELL SITE GROUNDING STANDARDS.
15. GROUND CABLE SHIELDS MINIMUM AT BOTH ENDS USING MANUFACTURERS CABLE GROUNDING KITS SUPPLIED BY PROJECT OWNER.
16. INSTALL #2 AWG GREEN–INSULATED STRANDED WIRE FOR ABOVE GRADE GROUNDING AND #2 BARE TINNED COPPER WIRE FOR BELOW GRADE GROUNDING UNLESS OTHERWISE NOTED.
17. ALL POWER AND GROUND CONNECTIONS TO BE CRIMP–STYLE, COMPRESSION WIRE LUGS AND WIRE NUTS BY HARGER (OR APPROVED EQUAL) RATED FOR OPERATION AT NO LESS THAN 75°C OR CADWELD EXOTHERMIC WELD. DO NOT ALLOW BARE COPPER WIRE TO BE IN CONTACT WITH GALVANIZED STEEL.
18. ROUTE GROUNDING CONDUCTORS ALONG THE SHORTEST AND STRAIGHTEST PATH POSSIBLE, EXCEPT AS OTHERWISE INDICATED. GROUNDING LEADS SHOULD NEVER BE BENT AT RIGHT ANGLE. ALWAYS MAKE AT LEAST 12" RADIUS BENDS. #6 WIRE CAN BE BENT AT 6" RADIUS WHEN NECESSARY. BOND ANY METAL OBJECTS WITHIN 6 FEET OF PROJECT OWNER EQUIPMENT OR CABINET TO MASTER GROUND BAR OR GROUNDING RING.
19. CONNECTIONS TO GROUND BARS SHALL BE MADE WITH TWO HOLE COMPRESSION TYPE COPPER LUGS. APPLY OXIDE INHIBITING COMPOUND TO ALL LOCATIONS.
20. APPLY OXIDE INHIBITING COMPOUND TO ALL MECHANICAL GROUND CONNECTIONS.
21. CONTRACTOR SHALL PROVIDE AND INSTALL OMNI DIRECTIONAL ELECTRONIC MARKER SYSTEM (EMS) BALLS OVER EACH GROUND ROD AND BONDING POINT BETWEEN EXISTING TOWER/ MONOPOLE GROUNDING RING AND EQUIPMENT GROUNDING RING.
22. CONTRACTOR SHALL TEST COMPLETED GROUND SYSTEM AND RECORD RESULTS FOR PROJECT CLOSE–OUT DOCUMENTATION. 5 OHMNS MINIMUM RESISTANCE REQUIRED.
23. CONTRACTOR SHALL CONDUCT ANTENNA, CABLE, AND LNA RETURN–LOSS AND DISTANCE–TO–FAULT MEASUREMENTS (SWEEP TESTS) AND RECORD RESULTS FOR PROJECT CLOSE OUT.
24. THE T–MOBILE ELECTRICAL EQUIPMENT INCLUDING PANEL, SWITCH GEAR AND DISCONNECT ARE TO BE LABELED WITH ENGRAVED BAKELITE LABELS.

GENERAL NOTES

1. THE CONTRACTOR SHALL COMPLY WITH ALL APPLICABLE CODES ORDINANCES, LAWS AND REGULATIONS OF ALL MUNICIPALITIES, UTILITIES COMPANY OR OTHER PUBLIC AUTHORITIES.
2. THE CONTRACTOR SHALL BE RESPONSIBLE FOR OBTAINING ALL PERMITS AND INSPECTIONS THAT MAY BE REQUIRED BY ANY FEDERAL, STATE, COUNTY OR MUNICIPAL AUTHORITIES.
3. THE CONTRACTOR SHALL NOTIFY THE CONSTRUCTION MANAGER, IN WRITING, OF ANY CONFLICTS, ERRORS OR OMISSIONS PRIOR TO THE SUBMISSION OF BIDS OR PERFORMANCE OF WORK. MINOR OMISSIONS OR ERRORS IN THE BID DOCUMENTS SHALL NOT RELIEVE THE CONTRACTOR FROM RESPONSIBILITY FOR THE OVERALL INTENT OF THESE DRAWINGS.
4. THE CONTRACTOR SHALL BE RESPONSIBLE FOR PROTECTING ALL EXISTING SITE IMPROVEMENTS PRIOR TO COMMENCING CONSTRUCTION. THE CONTRACTOR SHALL REPAIR ANY DAMAGE CAUSED AS A RESULT OF CONSTRUCTION OF THIS FACILITY.
5. THE SCOPE OF WORK FOR THIS PROJECT SHALL INCLUDE PROVIDING ALL MATERIALS, EQUIPMENT AND LABOR REQUIRED TO COMPLETE THIS PROJECT. ALL EQUIPMENT SHALL BE INSTALLED IN ACCORDANCE WITH THE MANUFACTURER'S RECOMMENDATIONS.
6. THE CONTRACTOR SHALL VISIT THE PROJECT SITE PRIOR TO SUBMITTING A BID TO VERIFY THAT THE PROJECT CAN BE CONSTRUCTED IN ACCORDANCE WITH THE CONTRACT DOCUMENTS.
7. CONTRACTOR SHALL VERIFY ANTENNA ELEVATION AND AZIMUTH WITH RF ENGINEERING PRIOR TO INSTALLATION.
8. ALL STRUCTURAL ELEMENTS SHALL BE HOT DIPPED GALVANIZED STEEL.
9. CONTRACTOR SHALL MAKE A UTILITY "ONE CALL" TO LOCATE ALL UTILITIES PRIOR TO EXCAVATING.
10. IF ANY UNDERGROUND UTILITIES OR STRUCTURES EXIST BENEATH THE PROJECT AREA, CONTRACTOR MUST LOCATE IT AND CONTACT THE APPLICANT & THE OWNER'S REPRESENTATIVE.
11. OCCUPANCY IS LIMITED TO PERIODIC MAINTENANCE AND INSPECTION BY TECHNICIANS APPROXIMATELY 2 TIMES PER MONTH.
12. PROPERTY LINE INFORMATION WAS PREPARED USING DEEDS, TAX MAPS, AND PLANS OF RECORD AND SHOULD NOT BE CONSTRUED AS AN ACCURATE BOUNDARY SURVEY.
13. THIS PLAN IS SUBJECT TO ALL EASEMENTS AND RESTRICTIONS OF RECORD.
14. THE PROPOSED FACILITY WILL CAUSE ONLY A "DE MINIMIS" INCREASE IN STORMWATER RUNOFF. THEREFORE, NO DRAINAGE STRUCTURES ARE PROPOSED.
15. NO SIGNIFICANT NOISE, SMOKE, DUST, OR ODOR WILL RESULT FROM THIS FACILITY.
16. THE FACILITY IS UNMANNED AND NOT INTENDED FOR HUMAN HABITATION (NO HANDICAP ACCESS REQUIRED).
17. THE FACILITY IS UNMANNED AND DOES NOT REQUIRE POTABLE WATER OR SANITARY SERVICE.
18. POWER TO THE FACILITY WILL BE MONITORED BY A SEPARATE METER.

STRUCTURAL NOTES

1. THE STRUCTURAL STEEL CONTRACTOR SHALL BE RESPONSIBLE FOR VERIFYING THE ANCHOR BOLT LOCATIONS, ELEVATION OF TOP OF CONCRETE AND BEARING PLATES, ALIGNMENT ETC. PRIOR TO START OF STEEL ERECTION.
2. THE LATEST EDITION OF THE FOLLOWING SPECIFICATIONS SHALL GOVERN:
   A. AISC – "ALLOWABLE STRESS DESIGN SPECIFICATION FOR STRUCTURAL STEEL BUILDINGS".
   B. AISC – "CODE OF STANDARD PRACTICE FOR STEEL BUILDINGS AND BRIDGES".
   C. AWS – "D1.1 STRUCTURAL WELDING CODE – STEEL".
3. MATERIAL, UNLESS OTHERWISE NOTED, SHALL CONFORM TO THE FOLLOWING ASTM SPECIFICATIONS

STRUCTURAL WIDE FLANGE & M SHAPES	A992 OR A572 FY = 50KSI
OTHER STRUCTURAL SHAPES AND PLATES	A36, FY = 36 KSI STRUCTURAL TUBING
A500, GRADE B	FY = 46 KSI
HIGH STRENGTH BOLTS	A325
THREADED RODS	A354, GRADE BC
ANCHOR BOLTS	A325 OR A354 BC
PIPE (HANDRAIL)	SCH 40 PIPE

4. ALL WELDING SHALL BE IN ACCORDANCE WITH AWS D1.1 USING E70XX ELECTRODES. UNLESS OTHERWISE NOTED PROVIDE CONTINUOUS MINIMUM SIZED FILLET WELDS PER AISC REQUIREMENTS.
5. HOLES IN STEEL SHALL BE DRILLED OR PUNCHED. ALL SLOTTED HOLES SHALL BE PROVIDED WITH SMOOTH EDGES. BURNING OF HOLES AND TORCH CUTTING AT THE SITE IS NOT PERMITTED. ALL HOLES IN BEARING PLATES SHALL BE DRILLED.
6. ALL STEEL TO BE HOT–DIPPED GALVANIZED AFTER FABRICATION PER ASTM A123.
7. EPOXY ANCHORS TO BE INSTALLED PER MANUFACTURER'S SPECIFICATIONS.
8. ALL BOLTS SHALL BE TIGHTENED USING TURN–OF–THE–NUT METHOD PER AISC SPECIFICATIONS USING STANDARD HOLES.
9. CONTRACTOR TO FIELD VERIFY ALL DIMENSIONS AND FIT PRIOR TO FABRICATION.

APPLICANT

Sprint
NOW APART OF T-Mobile
T-MOBILE NORTHEAST LLC

APC REALTY AND EQUIPMENT COMPANY, LLC
6220 SPRINT PARKWAY
OVERLAND PARK, KS 66251
(855) 848-3280

ENGINEER

NB+C TOTALLY COMMITTED.

NB+C ENGINEERING SERVICES, LLC.
6095 MARSHALEE DRIVE, SUITE 300
ELKRIDGE, MD 21075
(410) 712-7092

SITE INFORMATION

7WAC531A
NTM REPL FOR WA23XC350
575 HERNDON PARKWAY
HERNDON, VA 20170
TOWN OF HERNDON

DESIGN RECORD

REVISIONS

REV	DATE	DESCRIPTION	BY
1	05/24/21	REV PER SCREEN WALL	AMM
0	03/31/21	FINAL CDS	DH

PROFESSIONAL STAMP

PROFESSIONAL CERTIFICATION. I HEREBY CERTIFY THAT THESE DOCUMENTS WERE PREPARED OR APPROVED BY ME, AND THAT I AM A DULY LICENSED PROFESSIONAL ENGINEER UNDER THE LAWS OF THE STATE OF MARYLAND, LICENSE NO. 55491, EXPIRATION DATE 01/08/2022

ENGINEER

TRENT TRAVIS SNARR, P.E.
MARYLAND PROFESSIONAL ENGINEER
LICENSE #55491

SHEET TITLE

GENERAL NOTES

SHEET NUMBER

GN-1

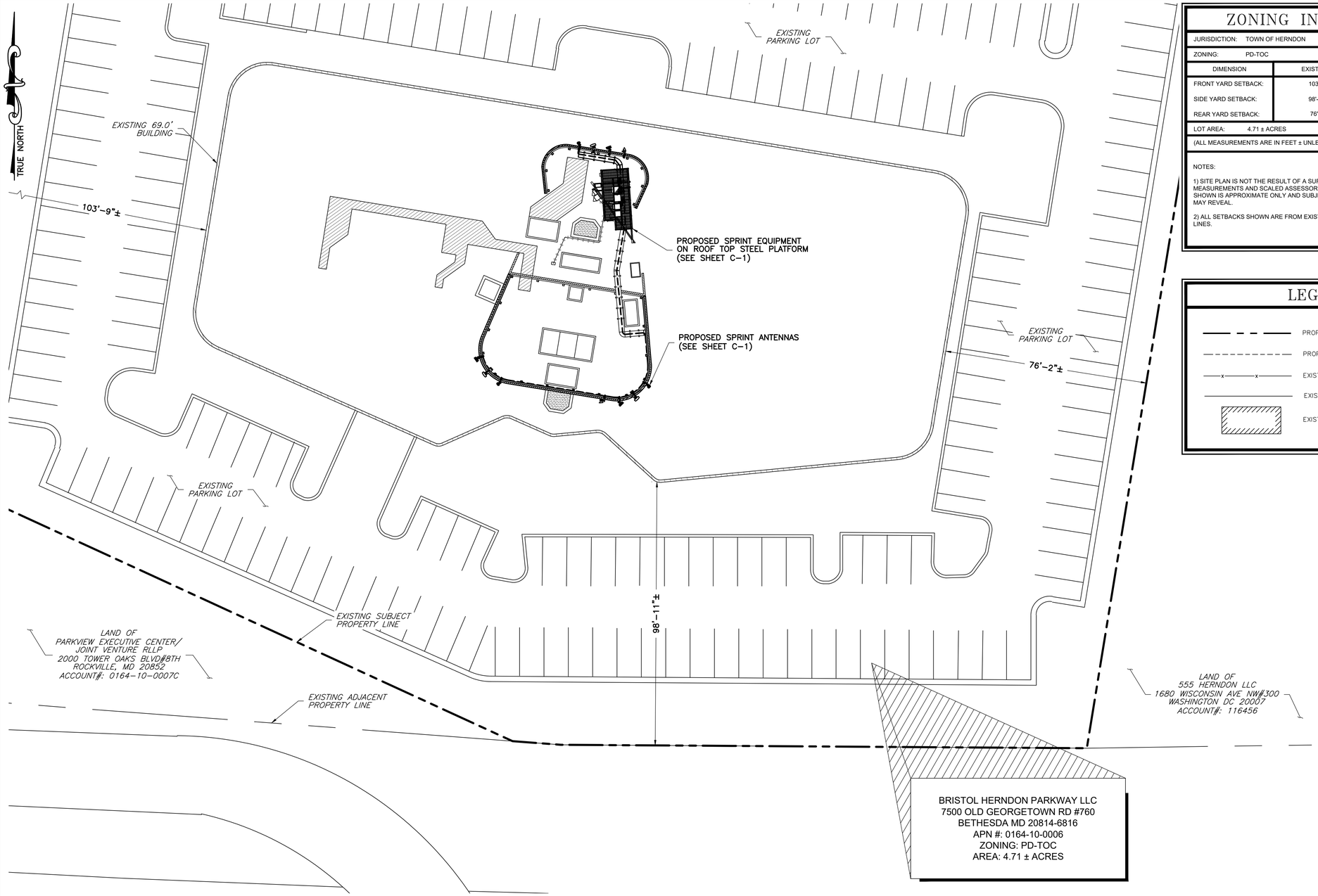

1 / SP-1 SITE PLAN
SCALE: 1" = 20' (22X34)
SCALE: 1" = 40' (11X17)

GRAPHIC SCALE

20 0 10 20 40 80

1 INCH = 20 FEET (22X34)
1 INCH = 40 FEET (11X17)

ZONING INFORMATION

JURISDICTION: TOWN OF HERNDON

ZONING: PD-TOC

DIMENSION	EXISTING ±	PROPOSED ±
FRONT YARD SETBACK:	103'-9"	NO CHANGE
SIDE YARD SETBACK:	98'-11"	NO CHANGE
REAR YARD SETBACK:	76'-2"	NO CHANGE

LOT AREA: 4.71 ± ACRES

(ALL MEASUREMENTS ARE IN FEET ± UNLESS OTHERWISE NOTED)

NOTES:

1) SITE PLAN IS NOT THE RESULT OF A SURVEY. IT IS BASED ON FIELD MEASUREMENTS AND SCALED ASSESSORS MAPS AVAILABLE. ALL INFORMATION SHOWN IS APPROXIMATE ONLY AND SUBJECT TO ANY CONDITION THAT A SURVEY MAY REVEAL.

2) ALL SETBACKS SHOWN ARE FROM EXISTING ROOF TOP TO EXISTING PROPERTY LINES.

LEGEND

- PROPERTY LINE – SUBJECT PARCEL
- PROPERTY LINE – ABUTTERS
- EXISTING FENCE LINE
- EXISTING ROAD
- EXISTING BUILDING

APPLICANT

Sprint
NOW APART OF T-Mobile
T-MOBILE NORTHEAST LLC

APC REALTY AND EQUIPMENT COMPANY, LLC
6220 SPRINT PARKWAY
OVERLAND PARK, KS 66251
(855) 848-3280

ENGINEER

NB+C TOTALLY COMMITTED.

NB+C ENGINEERING SERVICES, LLC.
6095 MARSHALEE DRIVE, SUITE 300
ELKRIDGE, MD 21075
(410) 712-7092

SITE INFORMATION

7WAC531A
NTM REPL FOR WA23XC350
575 HERNDON PARKWAY
HERNDON, VA 20170
TOWN OF HERNDON

DESIGN RECORD

REVISIONS

REV	DATE	DESCRIPTION	BY
1	05/24/21	REV PER SCREEN WALL	AMM
0	03/31/21	FINAL CD'S	DH

PROFESSIONAL STAMP

STATE OF MARYLAND
TRENT TRAVIS SNARR
05/18/21
55491
PROFESSIONAL ENGINEER

PROFESSIONAL CERTIFICATION. I HEREBY CERTIFY THAT THESE DOCUMENTS WERE PREPARED OR APPROVED BY ME, AND THAT I AM A DULY LICENSED PROFESSIONAL ENGINEER UNDER THE LAWS OF THE STATE OF MARYLAND, LICENSE NO. 55491, EXPIRATION DATE 01/08/2022

ENGINEER

TRENT TRAVIS SNARR, P.E.
MARYLAND PROFESSIONAL ENGINEER
LICENSE #55491

SHEET TITLE

SITE PLAN

SHEET NUMBER

SP-1

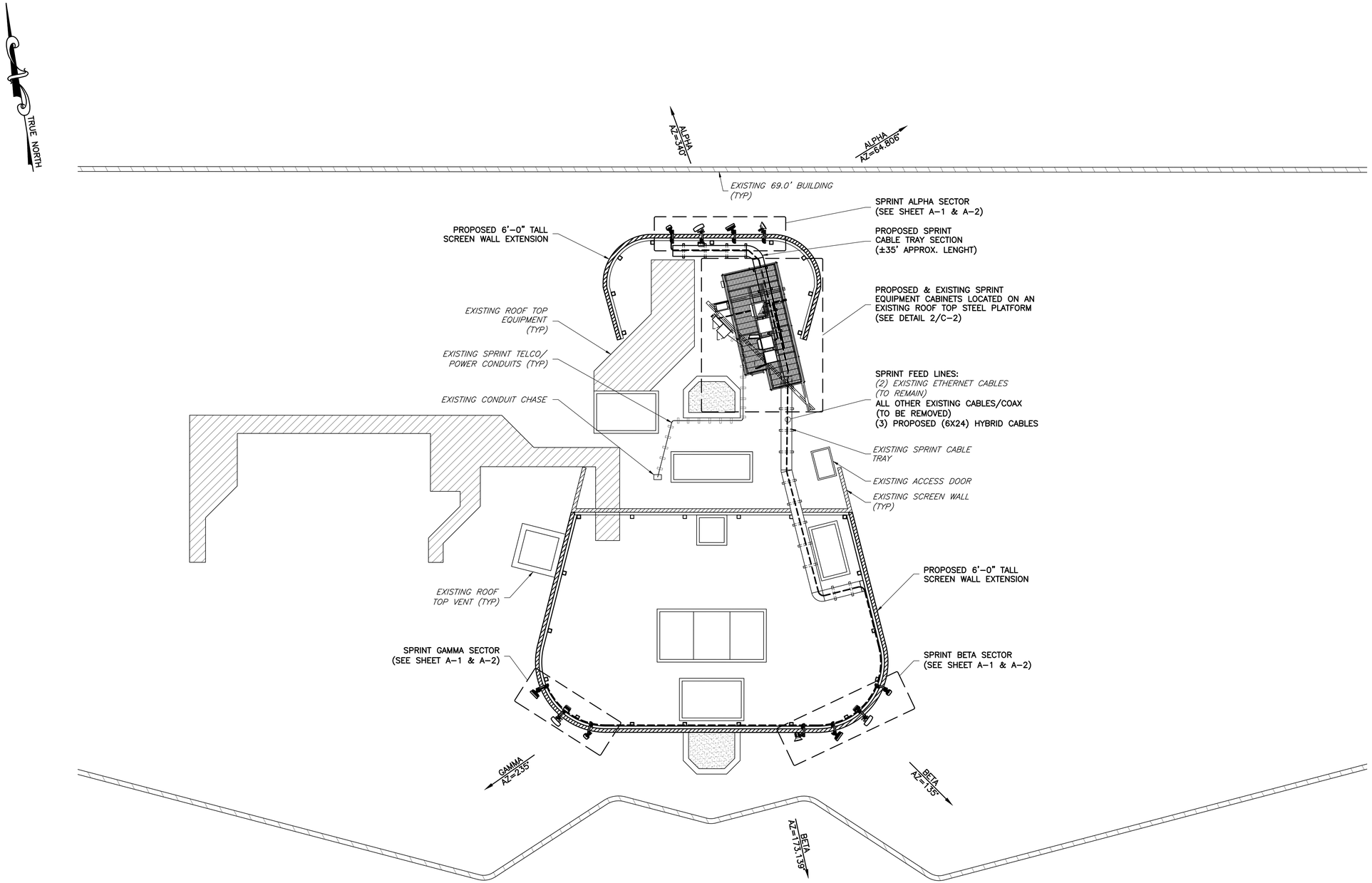

1 / C-1 ROOFTOP PLAN
SCALE: 1" = 10' (22X34)
SCALE: 1" = 20' (11X17)

GRAPHIC SCALE
10 0 5 10 20 40
1 INCH = 10 FEET (22X34)
1 INCH = 20 FEET (11X17)

NOTE: PROPOSED ANTENNA EQUIPMENT IS TO BE PAINTED TO MATCH THE EXISTING/ PROPOSED SCREEN WALL.

Know what's below. Call before you dig.

VIRGINIA ONE CALL SYSTEM, INC. 1-800-552-7001 STOP-CALL BEFORE YOU DIG!

VIRGINIA LAW REQUIRES THREE WORKING DAYS NOTICE PRIOR TO ANY EARTH MOVING ACTIVITIES

APPLICANT

Sprint
NOW APART OF T-Mobile
T-MOBILE NORTHEAST LLC
APC REALTY AND EQUIPMENT COMPANY, LLC
6220 SPRINT PARKWAY
OVERLAND PARK, KS 66251
(855) 848-3280

ENGINEER

NB+C TOTALLY COMMITTED.
NB+C ENGINEERING SERVICES, LLC.
6095 MARSHALEE DRIVE, SUITE 300
ELKRIDGE, MD 21075
(410) 712-7092

SITE INFORMATION

7WAC531A
NTM REPL FOR WA23XC350
575 HERNDON PARKWAY
HERNDON, VA 20170
TOWN OF HERNDON

DESIGN RECORD

REVISIONS

REV	DATE	DESCRIPTION	BY
1	05/24/21	REV PER SCREEN WALL	AMM
0	03/31/21	FINAL CD'S	DH

PROFESSIONAL STAMP

STATE OF MARYLAND TRENT TRAVIS SNARR 55491 PROFESSIONAL ENGINEER

PROFESSIONAL CERTIFICATION. I HEREBY CERTIFY THAT THESE DOCUMENTS WERE PREPARED OR APPROVED BY ME, AND THAT I AM A DULY LICENSED PROFESSIONAL ENGINEER UNDER THE LAWS OF THE STATE OF MARYLAND, LICENSE NO. 55491, EXPIRATION DATE 01/08/2022

ENGINEER

TRENT TRAVIS SNARR, P.E.
MARYLAND PROFESSIONAL ENGINEER
LICENSE #55491

SHEET TITLE

ROOFTOP PLAN

SHEET NUMBER

C-1

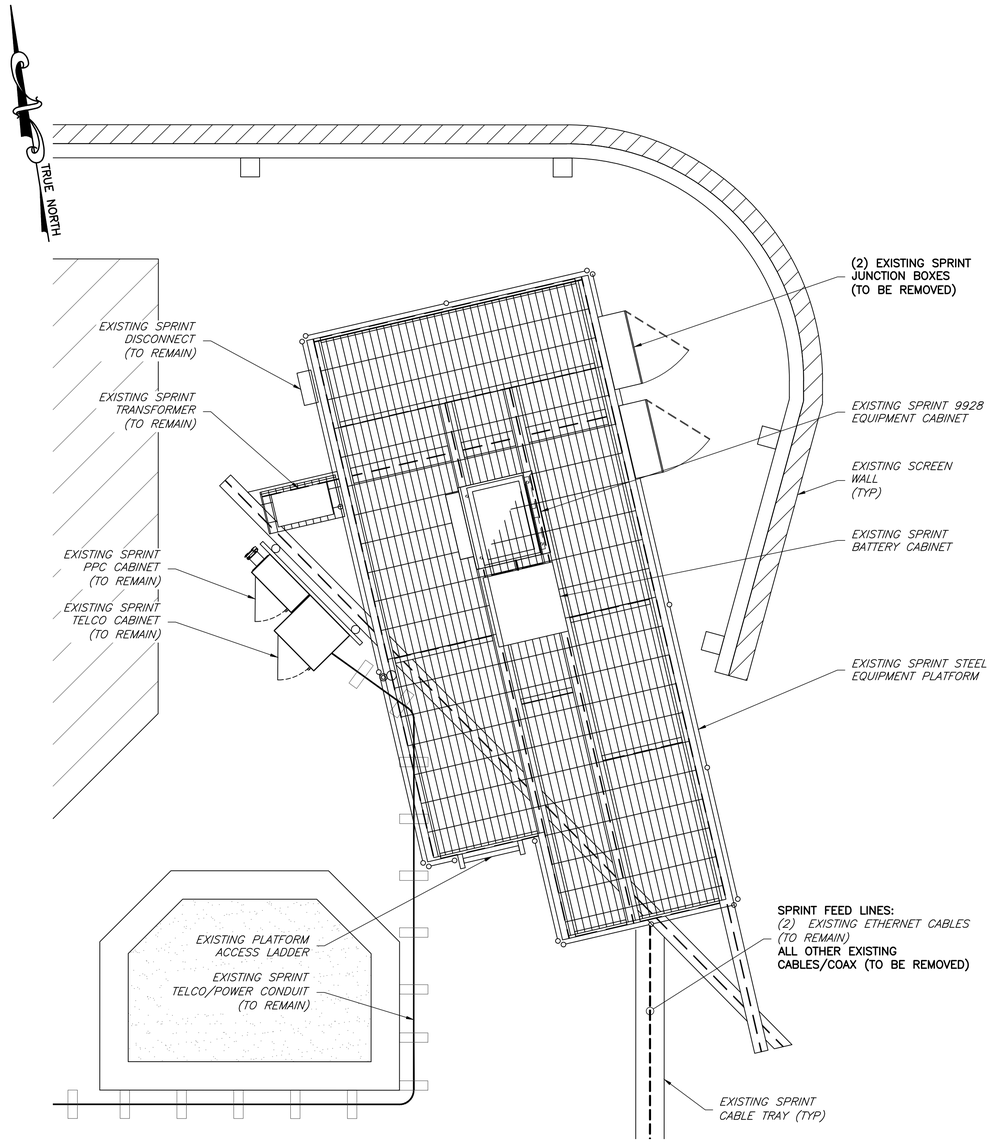

1 / C-2 EXISTING EQUIPMENT PLAN

SCALE: 3/8" = 1' (22X34)
SCALE: 3/16" = 1' (11X17)

GRAPHIC SCALE

4 0 1 2 4 8

3/8 INCH = 1 FOOT (22X34)
3/16 INCH = 1 FOOT (11X17)

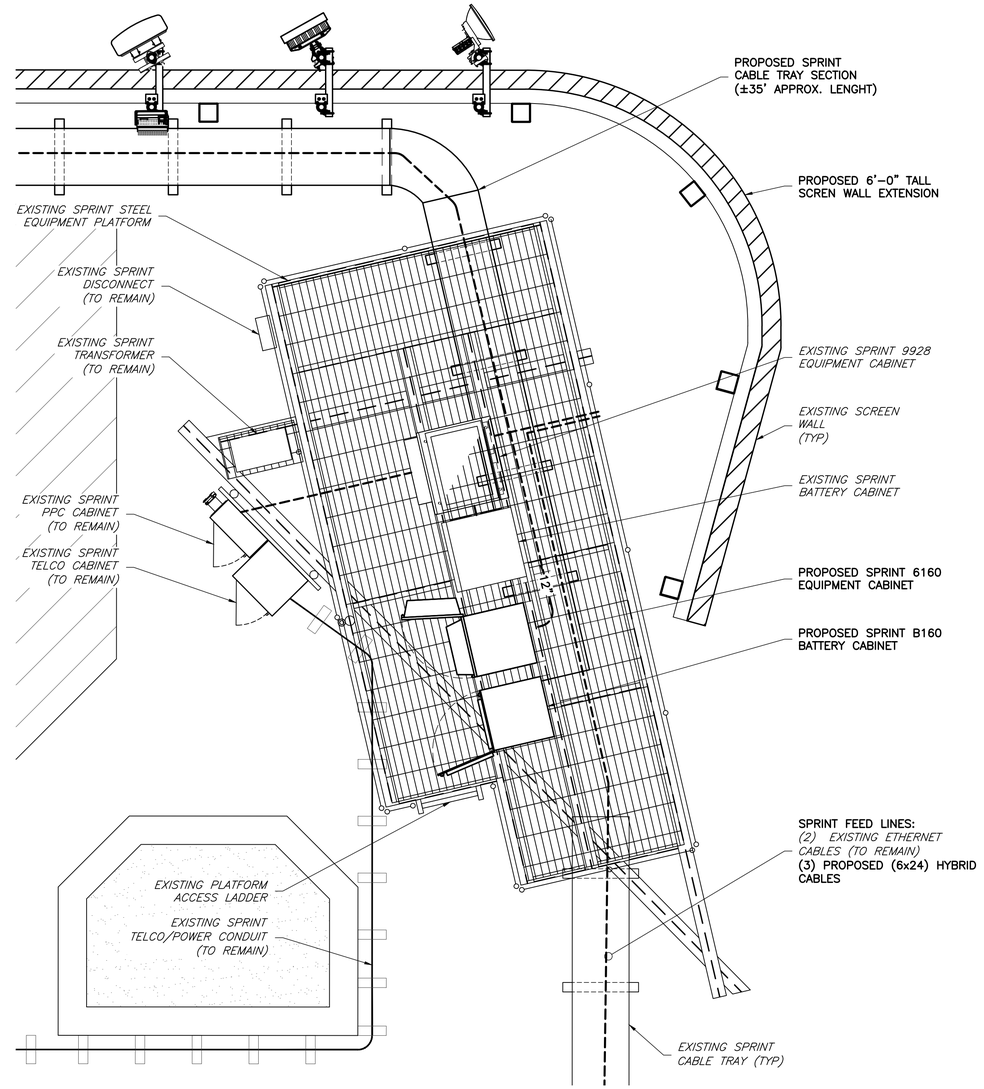

2 / C-2 PROPOSED EQUIPMENT PLAN

SCALE: 3/8" = 1' (22X34)
SCALE: 3/16" = 1' (11X17)

GRAPHIC SCALE

4 0 1 2 4 8

3/8 INCH = 1 FOOT (22X34)
3/16 INCH = 1 FOOT (11X17)

NOTE: PROPOSED ANTENNA EQUIPMENT IS TO BE PAINTED TO MATCH THE EXISTING/ PROPOSED SCREEN WALL.

APPLICANT

Sprint
NOW APART OF T-Mobile
T-MOBILE NORTHEAST LLC

APC REALTY AND EQUIPMENT COMPANY, LLC
6220 SPRINT PARKWAY
OVERLAND PARK, KS 66251
(855) 848-3280

ENGINEER

NB+C TOTALLY COMMITTED.

NB+C ENGINEERING SERVICES, LLC.
6095 MARSHALEE DRIVE, SUITE 300
ELKRIDGE, MD 21075
(410) 712-7092

SITE INFORMATION

7WAC531A
NTM REPL FOR WA23XC350
575 HERNDON PARKWAY
HERNDON, VA 20170
TOWN OF HERNDON

DESIGN RECORD

REVISIONS

REV	DATE	DESCRIPTION	BY
1	05/24/21	REV PER SCREEN WALL	AMM
0	03/31/21	FINAL CD'S	DH

PROFESSIONAL STAMP

STATE OF MARYLAND
TRENT TRAVIS SNARR
55491
PROFESSIONAL ENGINEER

PROFESSIONAL CERTIFICATION. I HEREBY CERTIFY THAT THESE DOCUMENTS WERE PREPARED OR APPROVED BY ME, AND THAT I AM A DULY LICENSED PROFESSIONAL ENGINEER UNDER THE LAWS OF THE STATE OF MARYLAND, LICENSE NO. 55491, EXPIRATION DATE 01/08/2022

ENGINEER

TRENT TRAVIS SNARR, P.E.
MARYLAND PROFESSIONAL ENGINEER
LICENSE #55491

SHEET TITLE

EQUIPMENT PLANS

SHEET NUMBER

C-2

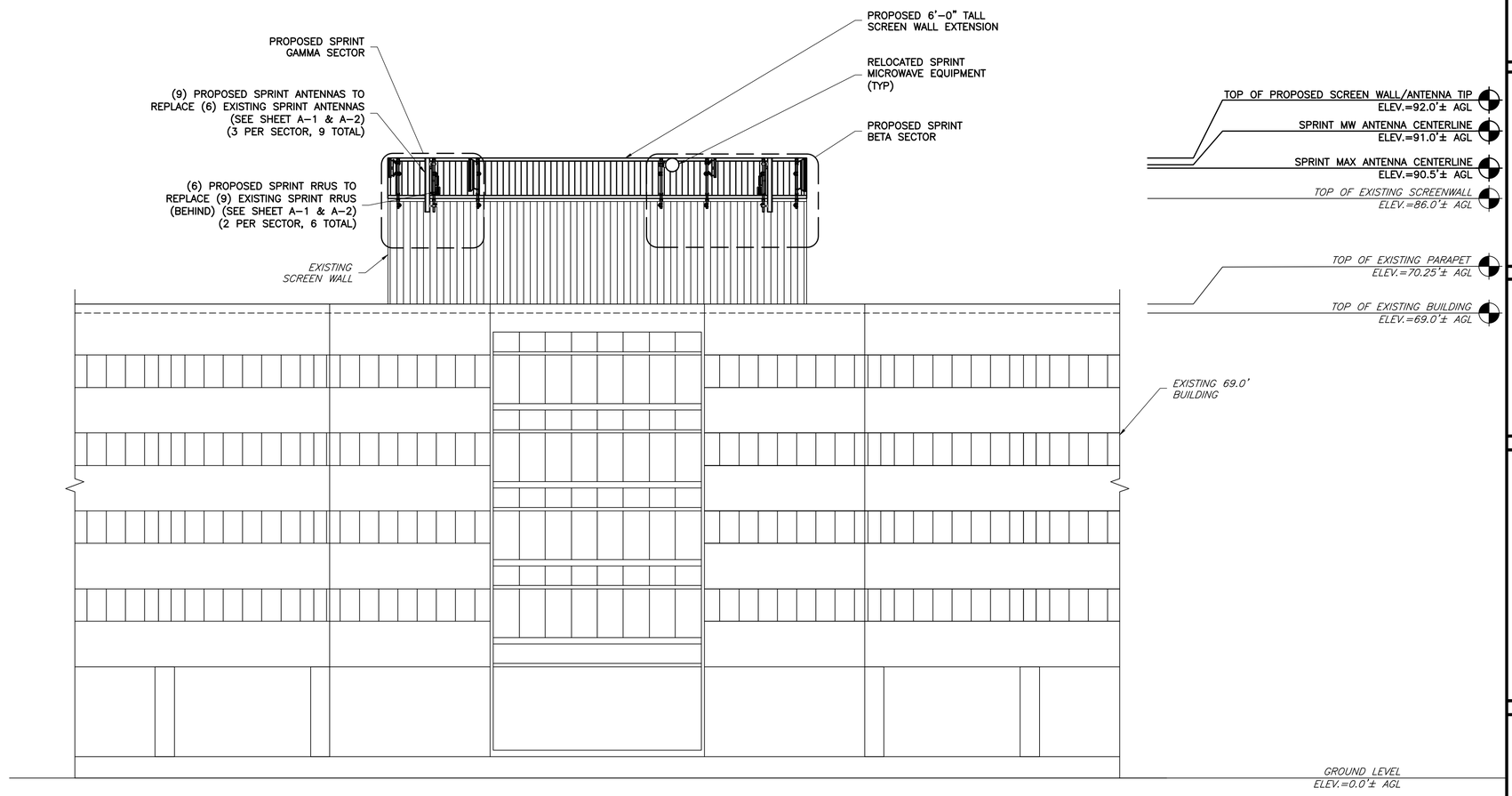

1 / C-3 SOUTH ELEVATION
SCALE: 1" = 10' (22X34)
SCALE: 1" = 20' (11X17)

GRAPHIC SCALE

10 0 5 10 20 40

1 INCH = 10 FEET (22X34)
1 INCH = 20 FEET (11X17)

FLUSH NOTE:
PROPOSED ANTENNAS ARE TO BE MOUNTED FLUSH LEVEL WITH THE TOP OF THE PROPOSED SCREEN WALL.

NOTE: PROPOSED ANTENNA EQUIPMENT IS TO BE PAINTED TO MATCH THE EXISTING/ PROPOSED SCREEN WALL.

GENERAL ANTENNA NOTES

1. ALL ANTENNAS TO BE FURNISHED WITH DOWNTILT BRACKETS. CONTRACTOR IS TO COORDINATE AND VERIFY THE PROPOSED DOWNTILTS WITH SPRINT MANAGER PRIOR TO CONSTRUCTION.
2. ANTENNA CENTERLINE HEIGHT IS IN REFERENCE TO ELEVATION 0.0'. (EXISTING GRADE)
3. CHECK WITH RF ENGINEER FOR LATEST ANTENNA TYPE & AZIMUTH.
4. CONTRACTOR SHALL VERIFY ANTENNA TYPE AND AZIMUTH WITH CONSTRUCTION MANAGER PRIOR TO CONSTRUCTION.
5. ALL CABLE LENGTHS ARE ESTIMATED AND SHALL BE FIELD VERIFIED BY THE CONTRACTOR.
6. COLOR TAPE MARKINGS MUST BE 3/4" WIDE AND UV RESISTANT, SUCH AS SCOTCH 35 VINYL ELECTRICAL COLOR CODING TAPE.
7. CONTRACTOR SHALL COORDINATE COLOR CODINGS IN THE FIELD WITH SPRINT REPRESENTATIVE.
8. PRIOR TO THE INSTALLATION OF THE PROPOSED EQUIPMENT OR MODIFICATION OF THE EXISTING STRUCTURE, A STRUCTURAL & MOUNT ANALYSIS SHALL BE PERFORMED BY THE OWNER'S AGENT TO CERTIFY THAT THE EXISTING/PROPOSED COMMUNICATION STRUCTURE AND COMPONENTS ARE STRUCTURALLY ADEQUATE TO SUPPORT ALL EXISTING AND PROPOSED ANTENNAS, COAXIAL CABLES AND OTHER APPURTENANCES. THE OWNER'S AGENT SHALL FURNISH A CERTIFICATION LETTER SEALED BY A REGISTERED PROFESSIONAL ENGINEER STATING THAT THIS STRUCTURAL ANALYSIS WAS PREPARED IN ACCORDANCE WITH ALL APPLICABLE CODES AND STANDARDS.

APPLICANT

Sprint
NOW APART OF T-Mobile
T-MOBILE NORTHEAST LLC

APC REALTY AND EQUIPMENT COMPANY, LLC
6220 SPRINT PARKWAY
OVERLAND PARK, KS 66251
(855) 848-3280

ENGINEER

NB+C TOTALLY COMMITTED.

NB+C ENGINEERING SERVICES, LLC.
6095 MARSHALEE DRIVE, SUITE 300
ELKRIDGE, MD 21075
(410) 712-7092

SITE INFORMATION

7WAC531A
NTM REPL FOR WA23XC350
575 HERNDON PARKWAY
HERNDON, VA 20170
TOWN OF HERNDON

DESIGN RECORD

REVISIONS

REV	DATE	DESCRIPTION	BY
1	05/24/21	REV PER SCREEN WALL	AMM
0	03/31/21	FINAL CD'S	DH

PROFESSIONAL STAMP

STATE OF MARYLAND
05/19/21
55491
PROFESSIONAL ENGINEER

PROFESSIONAL CERTIFICATION. I HEREBY CERTIFY THAT THESE DOCUMENTS WERE PREPARED OR APPROVED BY ME, AND THAT I AM A DULY LICENSED PROFESSIONAL ENGINEER UNDER THE LAWS OF THE STATE OF MARYLAND, LICENSE NO. 55491, EXPIRATION DATE 01/08/2022

ENGINEER

TRENT TRAVIS SNARR, P.E.
MARYLAND PROFESSIONAL ENGINEER
LICENSE #55491

SHEET TITLE

SOUTH ELEVATION

SHEET NUMBER

C-3

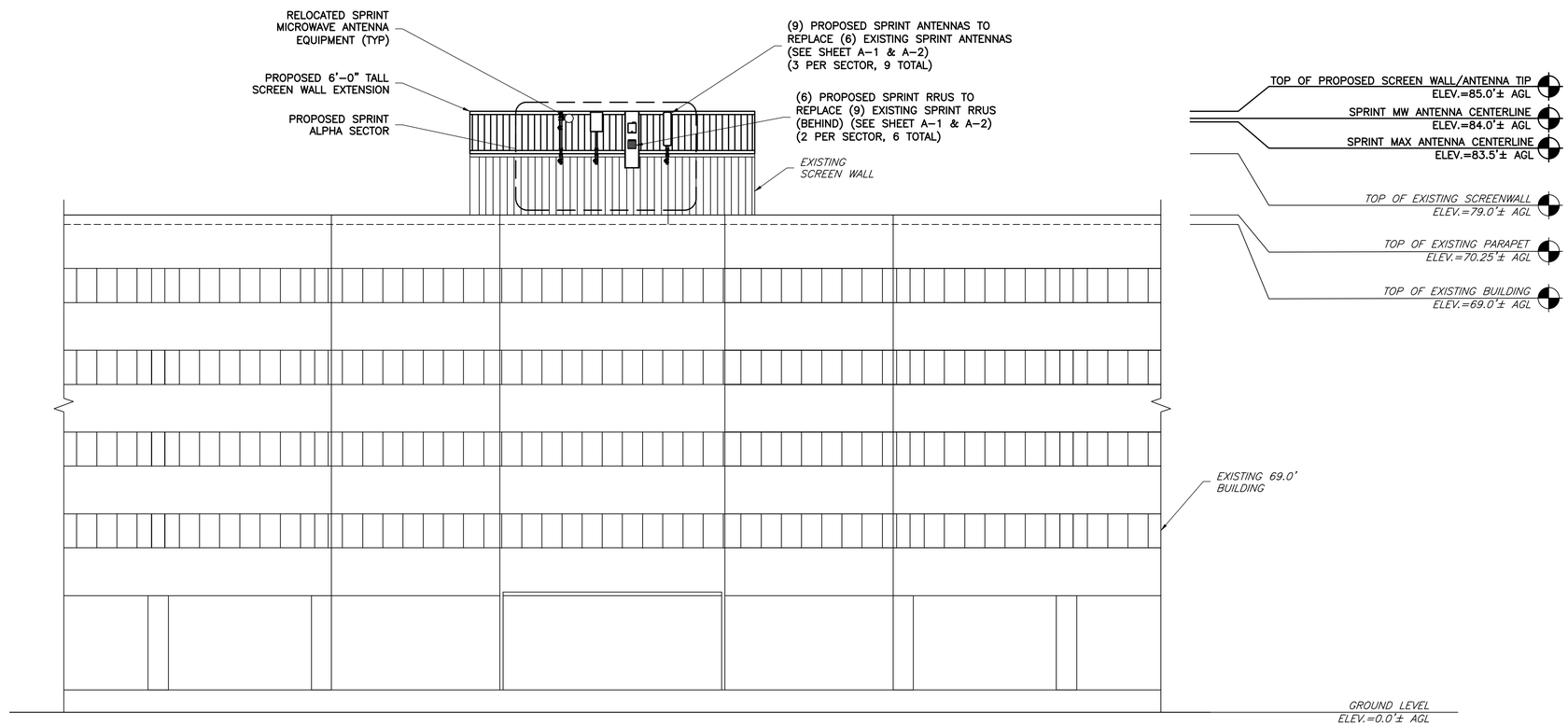

1 / C-4 NORTH ELEVATION
SCALE: 1" = 10' (22X34)
SCALE: 1" = 20' (11X17)

GRAPHIC SCALE

10 0 5 10 20 40

1 INCH = 10 FEET (22X34)
1 INCH = 20 FEET (11X17)

FLUSH NOTE:
PROPOSED ANTENNAS ARE TO BE MOUNTED FLUSH LEVEL WITH THE TOP OF THE PROPOSED SCREEN WALL.

NOTE: PROPOSED ANTENNA EQUIPMENT IS TO BE PAINTED TO MATCH THE EXISTING/ PROPOSED SCREEN WALL.

GENERAL ANTENNA NOTES

1. ALL ANTENNAS TO BE FURNISHED WITH DOWNTILT BRACKETS. CONTRACTOR IS TO COORDINATE AND VERIFY THE PROPOSED DOWNTILTS WITH SPRINT MANAGER PRIOR TO CONSTRUCTION.
2. ANTENNA CENTERLINE HEIGHT IS IN REFERENCE TO ELEVATION 0.0'. (EXISTING GRADE)
3. CHECK WITH RF ENGINEER FOR LATEST ANTENNA TYPE & AZIMUTH.
4. CONTRACTOR SHALL VERIFY ANTENNA TYPE AND AZIMUTH WITH CONSTRUCTION MANAGER PRIOR TO CONSTRUCTION.
5. ALL CABLE LENGTHS ARE ESTIMATED AND SHALL BE FIELD VERIFIED BY THE CONTRACTOR.
6. COLOR TAPE MARKINGS MUST BE 3/4" WIDE AND UV RESISTANT, SUCH AS SCOTCH 35 VINYL ELECTRICAL COLOR CODING TAPE.
7. CONTRACTOR SHALL COORDINATE COLOR CODINGS IN THE FIELD WITH SPRINT REPRESENTATIVE.
8. PRIOR TO THE INSTALLATION OF THE PROPOSED EQUIPMENT OR MODIFICATION OF THE EXISTING STRUCTURE, A STRUCTURAL & MOUNT ANALYSIS SHALL BE PERFORMED BY THE OWNER'S AGENT TO CERTIFY THAT THE EXISTING/PROPOSED COMMUNICATION STRUCTURE AND COMPONENTS ARE STRUCTURALLY ADEQUATE TO SUPPORT ALL EXISTING AND PROPOSED ANTENNAS, COAXIAL CABLES AND OTHER APPURTENANCES. THE OWNER'S AGENT SHALL FURNISH A CERTIFICATION LETTER SEALED BY A REGISTERED PROFESSIONAL ENGINEER STATING THAT THIS STRUCTURAL ANALYSIS WAS PREPARED IN ACCORDANCE WITH ALL APPLICABLE CODES AND STANDARDS.

APPLICANT

Sprint
NOW APART OF T-Mobile
T-MOBILE NORTHEAST LLC
APC REALTY AND EQUIPMENT COMPANY, LLC
6220 SPRINT PARKWAY
OVERLAND PARK, KS 66251
(855) 848-3280

ENGINEER

NB+C TOTALLY COMMITTED.
NB+C ENGINEERING SERVICES, LLC.
6095 MARSHALEE DRIVE, SUITE 300
ELKRIDGE, MD 21075
(410) 712-7092

SITE INFORMATION

7WAC531A
NTM REPL FOR WA23XC350
575 HERNDON PARKWAY
HERNDON, VA 20170
TOWN OF HERNDON

DESIGN RECORD

REVISIONS

REV	DATE	DESCRIPTION	BY
1	05/24/21	REV PER SCREEN WALL	AMM
0	03/31/21	FINAL CD'S	DH

PROFESSIONAL STAMP

STATE OF MARYLAND
TRENT TRAVIS SNARR
06/15/21
55491
PROFESSIONAL ENGINEER

PROFESSIONAL CERTIFICATION. I HEREBY CERTIFY THAT THESE DOCUMENTS WERE PREPARED OR APPROVED BY ME, AND THAT I AM A DULY LICENSED PROFESSIONAL ENGINEER UNDER THE LAWS OF THE STATE OF MARYLAND, LICENSE NO. 55491, EXPIRATION DATE 01/08/2022

ENGINEER

TRENT TRAVIS SNARR, P.E.
MARYLAND PROFESSIONAL ENGINEER
LICENSE #55491

SHEET TITLE

NORTH ELEVATION

SHEET NUMBER

C-4

ANTENNA SCHEDULE

SECTOR	STATUS	ANTENNA MANUFACTURER	ANTENNA MODEL	ANTENNA DIMENSIONS (HxWxD)	RAD CENTER	AZIMUTH	ELEC DOWNTILT	MECH DOWNTILT	RRU QUANTITY & MODEL	TMA/DIPLEXER QUANTITY & MODEL	CABLE QUANTITY & TYPE	CABLE LENGTH
A1	PROPOSED	ERICSSON	AIR32DB B2A/B66A	56.60"x12.90"x8.70"	82.50'	340°	4°/4°/4°/4°	0°			*(1) EXISTING ETHERNET CABLE* (1) PROPOSED (6x24) HYBRID CABLE	45.00'
A2	PROPOSED	RFS	APXVAALL24_43-U-NA20	95.90"x24.00"x8.50"	81.00'	340°	6°/6°/4°/4°	0°	(1) PROPOSED 4449 B71+B85 (1) PROPOSED 4415 B25			
A3	PROPOSED	ERICSSON	AIR6449_B41	33.10"x20.60"x8.30"	83.50'	340°	6°/6°	0°				
A4	RELOCATED	*RFS*	*SB1 220AMPT*	*18"øx10"*	*91.00'*	*64.806°*	*0°*	*0°*	*(1) EXISTING ODUS*			
B1	PROPOSED	ERICSSON	AIR32DB B2A/B66A	56.60"x12.90"x8.70"	89.50'	135°	4°/4°/4°/4°	0°			(1) PROPOSED (6x24) HYBRID CABLE *(1) EXISTING ETHERNET CABLE*	150.00'
B2	PROPOSED	RFS	APXVAALL24_43-U-NA20	95.90"x24.00"x8.50"	88.00'	135°	6°/6°/4°/4°	0°	(1) PROPOSED 4449 B71+B85 (1) PROPOSED 4415 B25			
B3	PROPOSED	ERICSSON	AIR6449_B41	33.10"x20.60"x8.30"	90.50'	135°	6°/6°	0°				
B4	RELOCATED	*RFS*	*SB2 220AMPT*	*26"ø x 11.5"*	*91.00'*	*173.139°*	*0°*	*0°*	*(2) EXISTING ODUS*			
C1	PROPOSED	ERICSSON	AIR32DB B2A/B66A	56.60"x12.90"x8.70"	89.50'	235°	4°/4°/4°/4°	0°			(1) PROPOSED (6x24) HYBRID CABLE	195.00'
C2	PROPOSED	RFS	APXVAALL24_43-U-NA20	95.90"x24.00"x8.50"	88.00'	235°	6°/6°/4°/4°	0°	(1) PROPOSED 4449 B71+B85 (1) PROPOSED 4415 B25			
C3	PROPOSED	ERICSSON	AIR6449_B41	33.10"x20.60"x8.30"	90.50'	235°	6°/6°	0°				

NOTES:
1. CONTRACTOR TO VERIFY PROPOSED ANTENNA INFORMATION IS THE MOST CURRENT DATA AT TIME OF CONSTRUCTION.
2. CONTRACTOR TO CONFIRM CABLE LENGTHS PRIOR TO CONSTRUCTION.

1 / A-1 ANTENNA CONFIGURATION SCHEDULE
NOT TO SCALE

FLUSH NOTE:
PROPOSED ANTENNAS ARE TO BE MOUNTED FLUSH LEVEL WITH THE TOP OF THE PROPOSED SCREEN WALL.

NOTE: PROPOSED ANTENNA EQUIPMENT IS TO BE PAINTED TO MATCH THE EXISTING/ PROPOSED SCREEN WALL.

ALL EXISTING SPRINT ANTENNAS, RADIOS, TMA'S, DIPLEXERS, AND CABLES WILL BE REMOVED FROM SITE. (MICROWAVE EQUIPMENT IS EXCLUDED FROM THIS REQUIREMENT)

APPLICANT

Sprint
NOW APART OF T-Mobile
T-MOBILE NORTHEAST LLC

APC REALTY AND EQUIPMENT COMPANY, LLC
6220 SPRINT PARKWAY
OVERLAND PARK, KS 66251
(855) 848-3280

ENGINEER

NB+C TOTALLY COMMITTED.

NB+C ENGINEERING SERVICES, LLC.
6095 MARSHALEE DRIVE, SUITE 300
ELKRIDGE, MD 21075
(410) 712-7092

SITE INFORMATION

7WAC531A
NTM REPL FOR WA23XC350
575 HERNDON PARKWAY
HERNDON, VA 20170
TOWN OF HERNDON

DESIGN RECORD

REVISIONS

REV	DATE	DESCRIPTION	BY
1	05/24/21	REV PER SCREEN WALL	AMM
0	03/31/21	FINAL CD'S	DH

PROFESSIONAL STAMP

STATE OF MARYLAND
TRENT TRAVIS SNARR
08/19/21
55491
PROFESSIONAL ENGINEER

PROFESSIONAL CERTIFICATION. I HEREBY CERTIFY THAT THESE DOCUMENTS WERE PREPARED OR APPROVED BY ME, AND THAT I AM A DULY LICENSED PROFESSIONAL ENGINEER UNDER THE LAWS OF THE STATE OF MARYLAND, LICENSE NO. 55491, EXPIRATION DATE 01/08/2022

ENGINEER

TRENT TRAVIS SNARR, P.E.
MARYLAND PROFESSIONAL ENGINEER
LICENSE #55491

SHEET TITLE

ANTENNA SCHEDULE

SHEET NUMBER

A-1

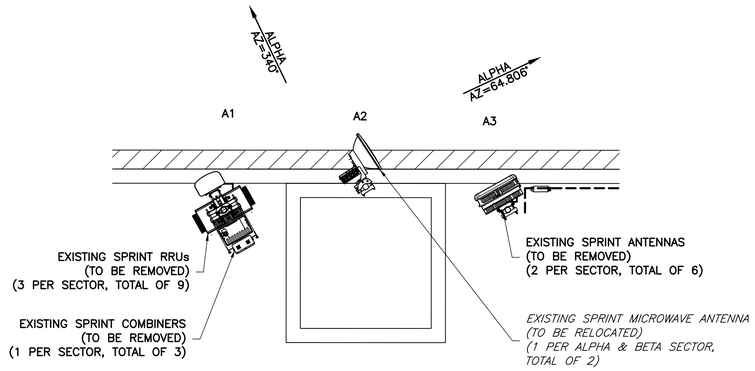

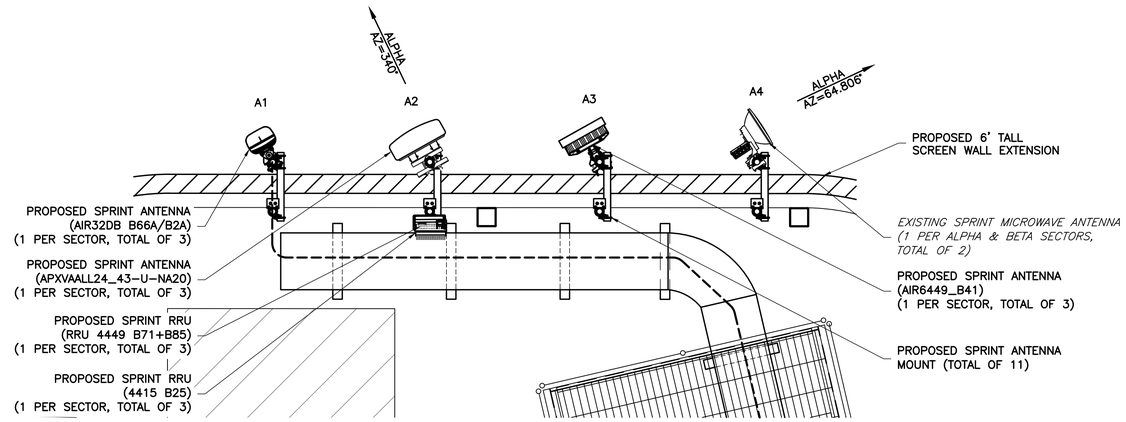

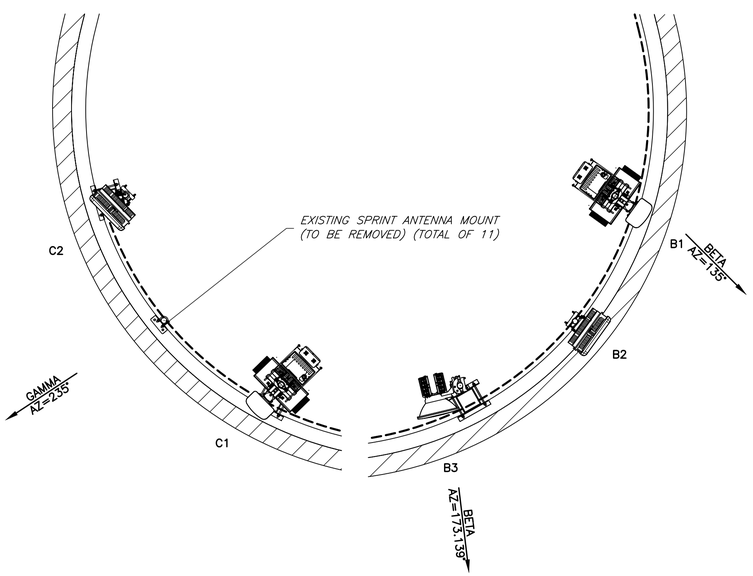

1 / A-2 EXISTING ANTENNA ORIENTATION PLAN
NOT TO SCALE

APPROX TRUE NORTH

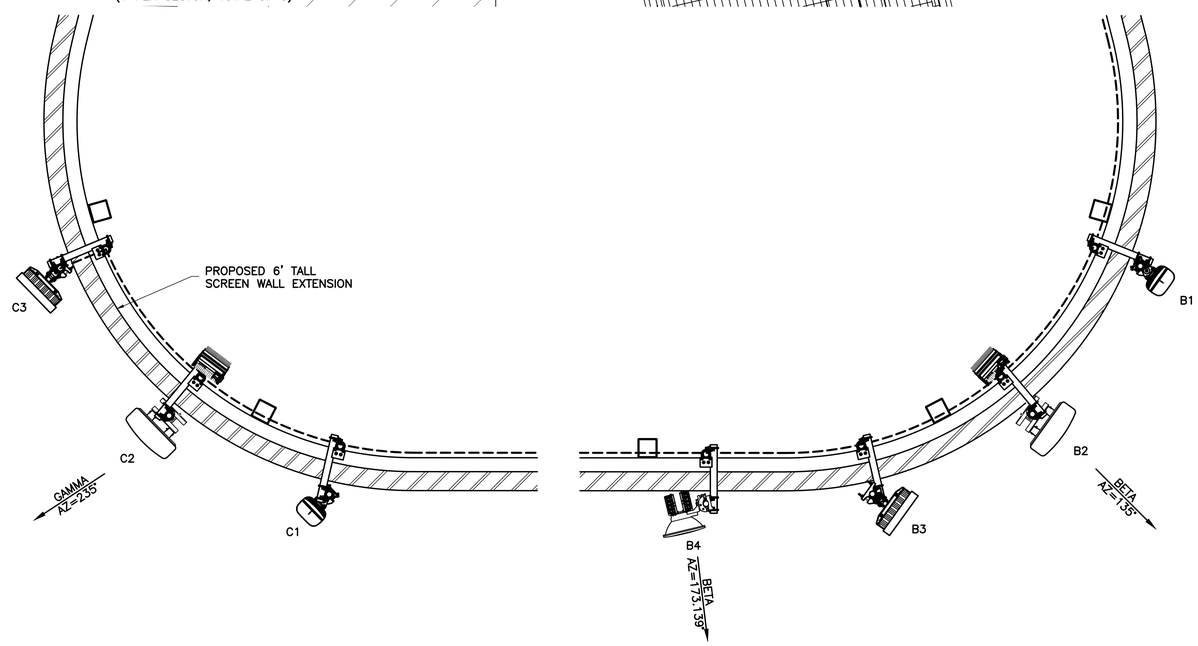

2 / A-2 PROPOSED ANTENNA ORIENTATION PLAN
NOT TO SCALE

APPROX TRUE NORTH

FLUSH NOTE:
PROPOSED ANTENNAS ARE TO BE MOUNTED FLUSH LEVEL WITH THE TOP OF THE PROPOSED SCREEN WALL.

NOTE: PROPOSED ANTENNA EQUIPMENT IS TO BE PAINTED TO MATCH THE EXISTING/ PROPOSED SCREEN WALL.

ALL EXISTING SPRINT ANTENNAS, RADIOS, TMA'S, DIPLEXERS, AND CABLES WILL BE REMOVED FROM SITE. (MICROWAVE EQUIPMENT IS EXCLUDED FROM THIS REQUIREMENT)

APPLICANT

Sprint
NOW APART OF T-Mobile
T-MOBILE NORTHEAST LLC
APC REALTY AND EQUIPMENT COMPANY, LLC
6220 SPRINT PARKWAY
OVERLAND PARK, KS 66251
(855) 848-3280

ENGINEER

NB+C TOTALLY COMMITTED.
NB+C ENGINEERING SERVICES, LLC.
6095 MARSHALEE DRIVE, SUITE 300
ELKRIDGE, MD 21075
(410) 712-7092

SITE INFORMATION

7WAC531A
NTM REPL FOR WA23XC350
575 HERNDON PARKWAY
HERNDON, VA 20170
TOWN OF HERNDON

DESIGN RECORD

REVISIONS

REV	DATE	DESCRIPTION	BY
1	05/24/21	REV PER SCREEN WALL	AMM
0	03/31/21	FINAL CD'S	DH

PROFESSIONAL STAMP

STATE OF MARYLAND
TRENT TRAVIS SNARR
55491
PROFESSIONAL ENGINEER

PROFESSIONAL CERTIFICATION. I HEREBY CERTIFY THAT THESE DOCUMENTS WERE PREPARED OR APPROVED BY ME, AND THAT I AM A DULY LICENSED PROFESSIONAL ENGINEER UNDER THE LAWS OF THE STATE OF MARYLAND, LICENSE NO. 55491, EXPIRATION DATE 01/08/2022

ENGINEER

TRENT TRAVIS SNARR, P.E.
MARYLAND PROFESSIONAL ENGINEER
LICENSE #55491

SHEET TITLE

ANTENNA ORIENTATION PLANS

SHEET NUMBER

A-2

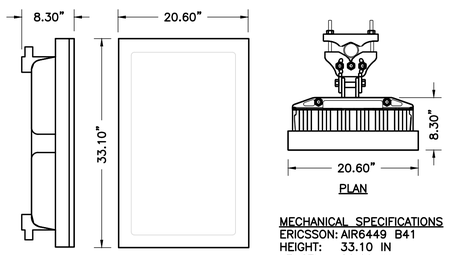

MECHANICAL SPECIFICATIONS
ERICSSON: AIR6449 B41
HEIGHT: 33.10 IN
LENGTH: 20.60 IN
WIDTH: 8.30 IN
WEIGHT: 112.00 LBS

1 / A-3 ERICSSON PANEL ANTENNA
NOT TO SCALE

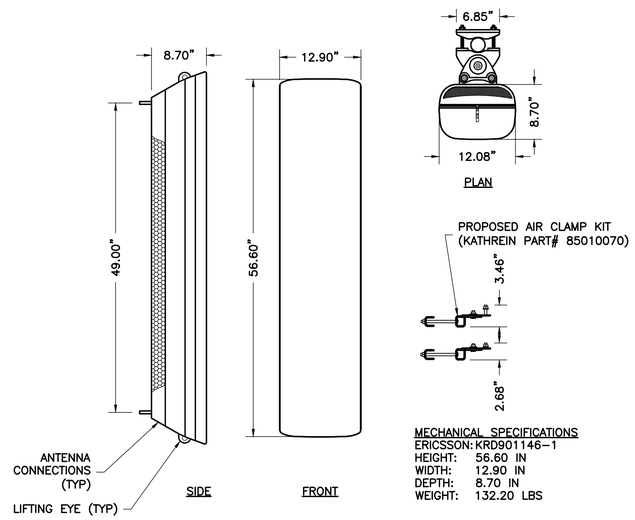

MECHANICAL SPECIFICATIONS
ERICSSON: KRD901146-1
HEIGHT: 56.60 IN
WIDTH: 12.90 IN
DEPTH: 8.70 IN
WEIGHT: 132.20 LBS

2 / A-3 ERICSSON PANEL ANTENNA
NOT TO SCALE

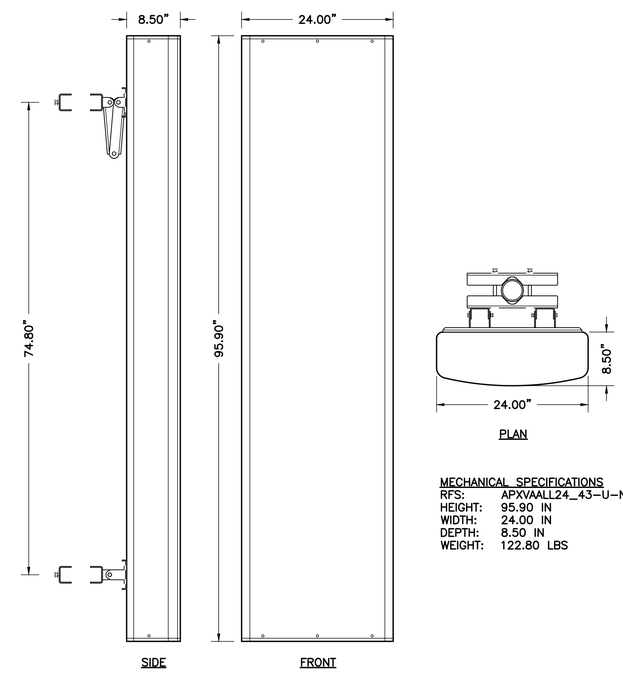

MECHANICAL SPECIFICATIONS
RFS: APXVAALL24_43-U-NA20
HEIGHT: 95.90 IN
WIDTH: 24.00 IN
DEPTH: 8.50 IN
WEIGHT: 122.80 LBS

3 / A-3 RFS PANEL ANTENNA
NOT TO SCALE

APPLICANT

Sprint
NOW APART OF T-Mobile
T-MOBILE NORTHEAST LLC

APC REALTY AND EQUIPMENT COMPANY, LLC
6220 SPRINT PARKWAY
OVERLAND PARK, KS 66251
(855) 848-3280

ENGINEER

NB+C TOTALLY COMMITTED.

NB+C ENGINEERING SERVICES, LLC.
6095 MARSHALEE DRIVE, SUITE 300
ELKRIDGE, MD 21075
(410) 712-7092

SITE INFORMATION

7WAC531A
NTM REPL FOR WA23XC350
575 HERNDON PARKWAY
HERNDON, VA 20170
TOWN OF HERNDON

DESIGN RECORD

REVISIONS

REV	DATE	DESCRIPTION	BY
1	05/24/21	REV PER SCREEN WALL	AMM
0	03/31/21	FINAL CD'S	DH

PROFESSIONAL STAMP

STATE OF MARYLAND
TRENT TRAVIS SNARR
05/19/21
55491
PROFESSIONAL ENGINEER

PROFESSIONAL CERTIFICATION. I HEREBY CERTIFY THAT THESE DOCUMENTS WERE PREPARED OR APPROVED BY ME, AND THAT I AM A DULY LICENSED PROFESSIONAL ENGINEER UNDER THE LAWS OF THE STATE OF MARYLAND, LICENSE NO. 55491, EXPIRATION DATE 01/06/2022

ENGINEER

TRENT TRAVIS SNARR, P.E.
MARYLAND PROFESSIONAL ENGINEER
LICENSE #55491

SHEET TITLE

ANTENNA SPECIFICATIONS & DETAILS

SHEET NUMBER

A-3

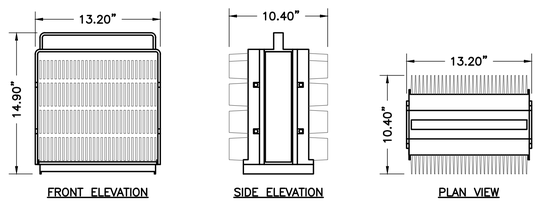

SIZE AND WEIGHT TABLE				
MANUFACTURER & MODEL NUMBER	HEIGHT	WIDTH	DEPTH	WEIGHT WITHOUT BRACKET
ERICSSON 4449 B71+B85	14.90"	13.20"	10.40"	74.00 LBS

NOTE:
DO NOT PAINT THE RRU. RRU SOLAR SHIELD CAN BE PAINTED PER MANUFACTURER'S METHOD OF PROCEDURE.

1 / A-4 REMOTE RADIO UNIT (RRU)
NOT TO SCALE

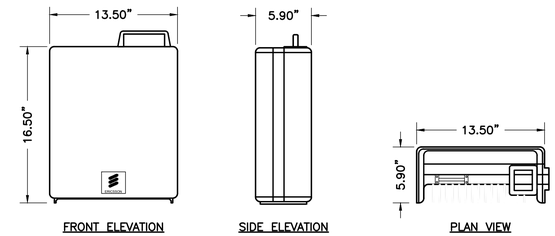

SIZE AND WEIGHT TABLE				
MANUFACTURER & MODEL NUMBER	HEIGHT	WIDTH	DEPTH	WEIGHT WITHOUT BRACKET
ERICSSON 4415	16.50"	13.50"	5.90"	46.00 LBS

NOTE:
DO NOT PAINT THE RRU. RRU SOLAR SHIELD CAN BE PAINTED PER MANUFACTURER'S METHOD OF PROCEDURE.

2 / A-4 REMOTE RADIO UNIT (RRU)
NOT TO SCALE

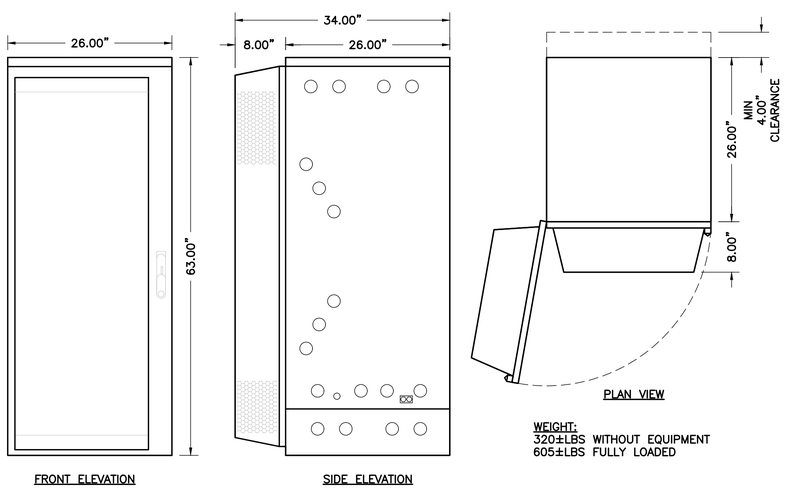

3 / A-4 6160 ENCLOSURE CABINET
NOT TO SCALE

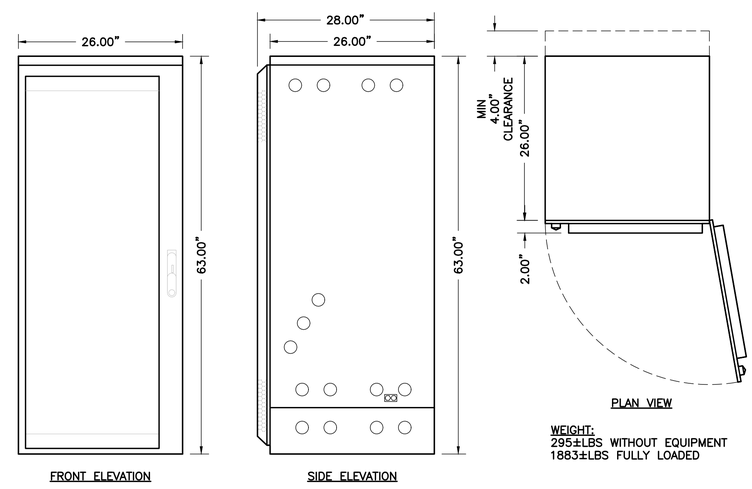

4 / A-4 B160 BATTERY CABINET
NOT TO SCALE

APPLICANT

Sprint
NOW APART OF T-Mobile
T-MOBILE NORTHEAST LLC

APC REALTY AND EQUIPMENT COMPANY, LLC
6220 SPRINT PARKWAY
OVERLAND PARK, KS 66251
(855) 848-3280

ENGINEER

NB+C TOTALLY COMMITTED.

NB+C ENGINEERING SERVICES, LLC.
6095 MARSHALEE DRIVE, SUITE 300
ELKRIDGE, MD 21075
(410) 712-7092

SITE INFORMATION

7WAC531A
NTM REPL FOR WA23XC350
575 HERNDON PARKWAY
HERNDON, VA 20170
TOWN OF HERNDON

DESIGN RECORD

REVISIONS

REV	DATE	DESCRIPTION	BY
1	05/24/21	REV PER SCREEN WALL	AMM
0	03/31/21	FINAL CD'S	DH

PROFESSIONAL STAMP

PROFESSIONAL CERTIFICATION. I HEREBY CERTIFY THAT THESE DOCUMENTS WERE PREPARED OR APPROVED BY ME, AND THAT I AM A DULY LICENSED PROFESSIONAL ENGINEER UNDER THE LAWS OF THE STATE OF MARYLAND, LICENSE NO. 55491, EXPIRATION DATE 01/08/2022

ENGINEER

TRENT TRAVIS SNARR, P.E.
MARYLAND PROFESSIONAL ENGINEER
LICENSE #55491

SHEET TITLE

EQUIPMENT SPECIFICATIONS & DETAILS

SHEET NUMBER

A-4

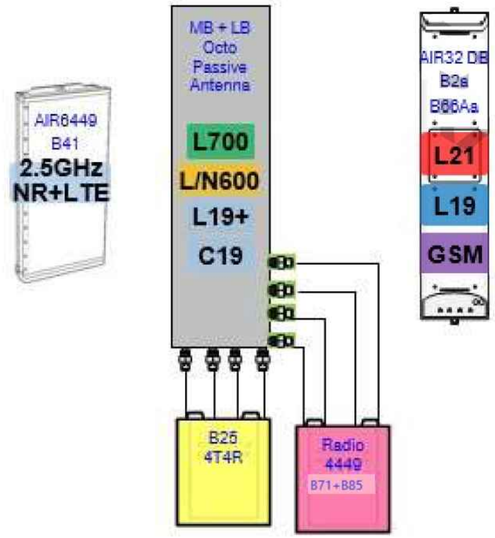

1 / A-5 67D5A97DB_B25 RF DESIGN SCHEMATIC
NOT TO SCALE

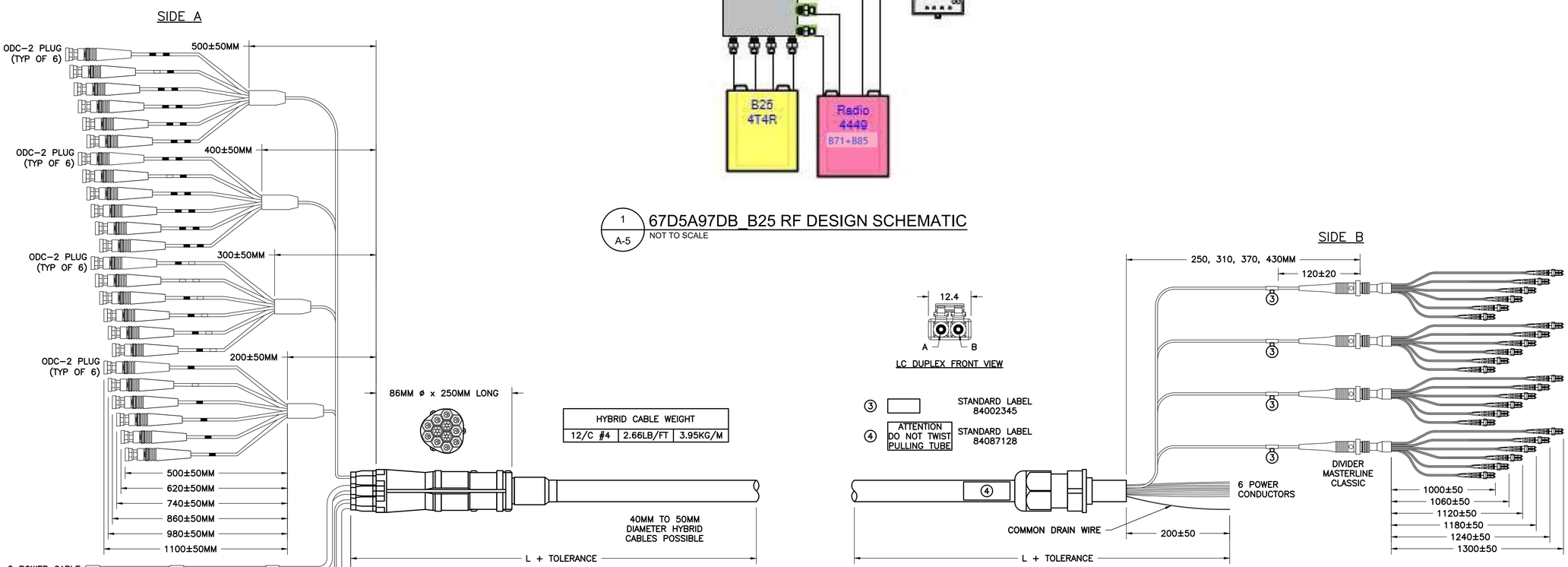

HYBRID CABLE WEIGHT		
12/C #4	2.66LB/FT	3.95KG/M

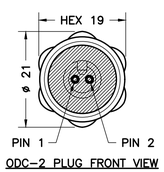

ODC-2 PLUG FRONT VIEW

TOLERANCE	ASSEMBLY LENGTH
+80	L < 5M
+2%	L ≥ 5M

POWER	
LENGTH	DIAMETER
L ≤ 60M	6MM²(10AWG)
L ≥ 60M	10MM²(8AWG)

FIBER OPTIC

RRH NO.	SIDE A ODC PLUG	SIDE A PIN	SIDE B PIN	SIDE B COLOR LCD BOOTS	SIDE B LENGTH	SIDE B RUBBER GROMMETS
1	ODC-2 RED	1	B	RED (SHORT BREAKOUT)	1000 ± 50	1
		2	A			
2	ODC-2 GREEN	1	B	GREEN	1060 ± 50	
		2	A			
3	ODC-2 BLUE	1	B	BLUE	1120 ± 50	1
		2	A			
4	ODC-2 YELLOW	1	B	YELLOW	1180 ± 50	
		2	A			
5	ODC-2 WHITE	1	B	WHITE	1240 ± 50	1
		2	A			
6	ODC-2 BLACK	1	B	BLACK	1300 ± 50	
		2	A			

POWER

RRH NO.	REF HOOK UP	SIDE A WIRE COLOR	SIDE A CABLE DESIGNATOR	SIDE B WIRE COLOR
1	−48V	BLACK	RED	RED
	0V	GREY		BLACK
	GROUND	DRAIN		COMMON DRAIN
2	−48V	BLACK	GREEN	GREEN
	0V	GREY		WHITE
	GROUND	DRAIN		COMMON DRAIN
3	−48V	BLACK	BLUE	BLUE
	0V	GREY		ORANGE
	GROUND	DRAIN		COMMON DRAIN

POWER

RRH NO.	REF HOOK UP	SIDE A WIRE COLOR	SIDE A CABLE DESIGNATOR	SIDE B WIRE COLOR
4	−48V	BLACK	YELLOW	RED
	0V	GREY		BLACK
	GROUND	DRAIN		COMMON DRAIN
5	−48V	BLACK	WHITE	GREEN
	0V	GREY		WHITE
	GROUND	DRAIN		COMMON DRAIN
6	−48V	BLACK	BLACK	BLUE
	0V	GREY		ORANGE
	GROUND	DRAIN		COMMON DRAIN

2 / A-5 MLE HYBRID CABLE (6 POWER/24 FIBER)
NOT TO SCALE

APPLICANT

Sprint
NOW APART OF T-Mobile
T-MOBILE NORTHEAST LLC
APC REALTY AND EQUIPMENT COMPANY, LLC
6220 SPRINT PARKWAY
OVERLAND PARK, KS 66251
(855) 848-3280

ENGINEER

NB+C TOTALLY COMMITTED.
NB+C ENGINEERING SERVICES, LLC.
6095 MARSHALEE DRIVE, SUITE 300
ELKRIDGE, MD 21075
(410) 712-7092

SITE INFORMATION

7WAC531A
NTM REPL FOR WA23XC350
575 HERNDON PARKWAY
HERNDON, VA 20170
TOWN OF HERNDON

DESIGN RECORD

REVISIONS

REV	DATE	DESCRIPTION	BY
1	05/24/21	REV PER SCREEN WALL	AMM
0	03/31/21	FINAL CD'S	DH

PROFESSIONAL STAMP

STATE OF MARYLAND
TRENT TRAVIS SNARR
06-17-21
55491
PROFESSIONAL ENGINEER

PROFESSIONAL CERTIFICATION. I HEREBY CERTIFY THAT THESE DOCUMENTS WERE PREPARED OR APPROVED BY ME, AND THAT I AM A DULY LICENSED PROFESSIONAL ENGINEER UNDER THE LAWS OF THE STATE OF MARYLAND, LICENSE NO. 55491, EXPIRATION DATE 01/08/2022

ENGINEER

TRENT TRAVIS SNARR, P.E.
MARYLAND PROFESSIONAL ENGINEER
LICENSE #55491

SHEET TITLE

CABLING DETAILS & RF PLUMBING DIAGRAM

SHEET NUMBER

A-5

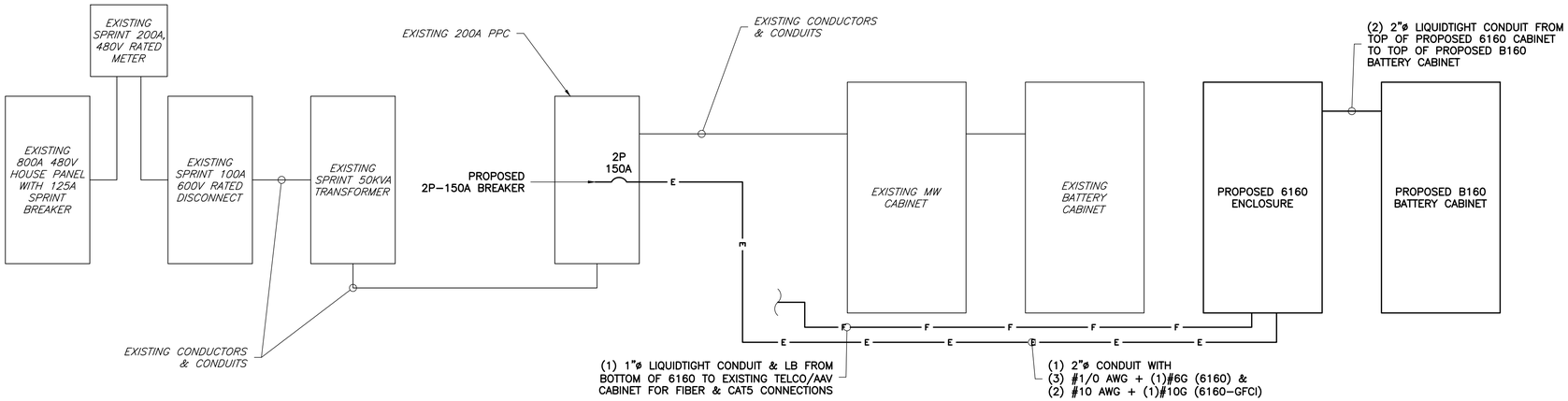

1 / E-1 POWER DIAGRAM
NOT TO SCALE

PPC PANEL													
MAIN BREAKER RATING (A):		200		SYSTEM VOLTAGE (V):			240		PHASE: 1 WIRE: 3 BRANCH CB: 24				
CKT	CIRCUIT DESCRIPTION	WATTAGE C	WATTAGE NC	POLE	BRK	LOAD PER PHASE A	LOAD PER PHASE B	BRK	POLE	WATTAGE NC	WATTAGE C	CIRCUIT DESCRIPTION	CKT
1	CAB 1	0	5000	2	100	5000		60	2	0	0	SURGE ARRESTOR	2
3		0	5000				5000			0	0		4
5	*6160 CABINET	0	6125	2	150	6485		10	1	360	0	TEL CABINET FAN	6
7		0	6125				6725	15	1	600	0	RECP/LIGHTS	8
9		0	6125			6485		20	1	360	0	**6160 GFCI	10
11		0	6125				6125			0	0		12
						TOTAL LOADS PER PHASE							
NOTES						17970	17850						
*INSTALL (1) NEW 2P–150A BREAKER FOR PROPOSED 6160 **INSTALL (1) NEW 1P–20A BREAKER FOR PROPOSED 6160 GFCI						SUBTOTAL CONTINUOUS		125% TOTAL CONTINUOUS (VA)				0	
						0		100% TOTAL NON–CONTINUOUS (VA)				35820	
						SUBTOTAL NON–CONTINUOUS		TOTAL AMPS				149.25	
						35820		TOTAL CONNECTED LOAD (KVA)				35.82	
								SPARE CAPACITY (A)				50.75	

NOTE:
GC TO VERIFY EXISTING AC AND LIGHTING SYSTEMS.

2 / E-1 PANEL SCHEDULE
NOT TO SCALE

APPLICANT

Sprint
NOW APART OF T-Mobile
T-MOBILE NORTHEAST LLC

APC REALTY AND EQUIPMENT COMPANY, LLC
6220 SPRINT PARKWAY
OVERLAND PARK, KS 66251
(855) 848-3280

ENGINEER

NB+C TOTALLY COMMITTED.

NB+C ENGINEERING SERVICES, LLC.
6095 MARSHALEE DRIVE, SUITE 300
ELKRIDGE, MD 21075
(410) 712-7092

SITE INFORMATION

7WAC531A
NTM REPL FOR WA23XC350
575 HERNDON PARKWAY
HERNDON, VA 20170
TOWN OF HERNDON

DESIGN RECORD

REVISIONS

REV	DATE	DESCRIPTION	BY
1	05/24/21	REV PER SCREEN WALL	AMM
0	03/31/21	FINAL CD'S	DH

PROFESSIONAL STAMP

STATE OF MARYLAND
TRENT TRAVIS SNARR
08/15/21
55491
PROFESSIONAL ENGINEER

PROFESSIONAL CERTIFICATION. I HEREBY CERTIFY THAT THESE DOCUMENTS WERE PREPARED OR APPROVED BY ME, AND THAT I AM A DULY LICENSED PROFESSIONAL ENGINEER UNDER THE LAWS OF THE STATE OF MARYLAND, LICENSE NO. 55491, EXPIRATION DATE 01/08/2022

ENGINEER

TRENT TRAVIS SNARR, P.E.
MARYLAND PROFESSIONAL ENGINEER
LICENSE #55491

SHEET TITLE

ELECTRICAL DETAILS

SHEET NUMBER

E-1

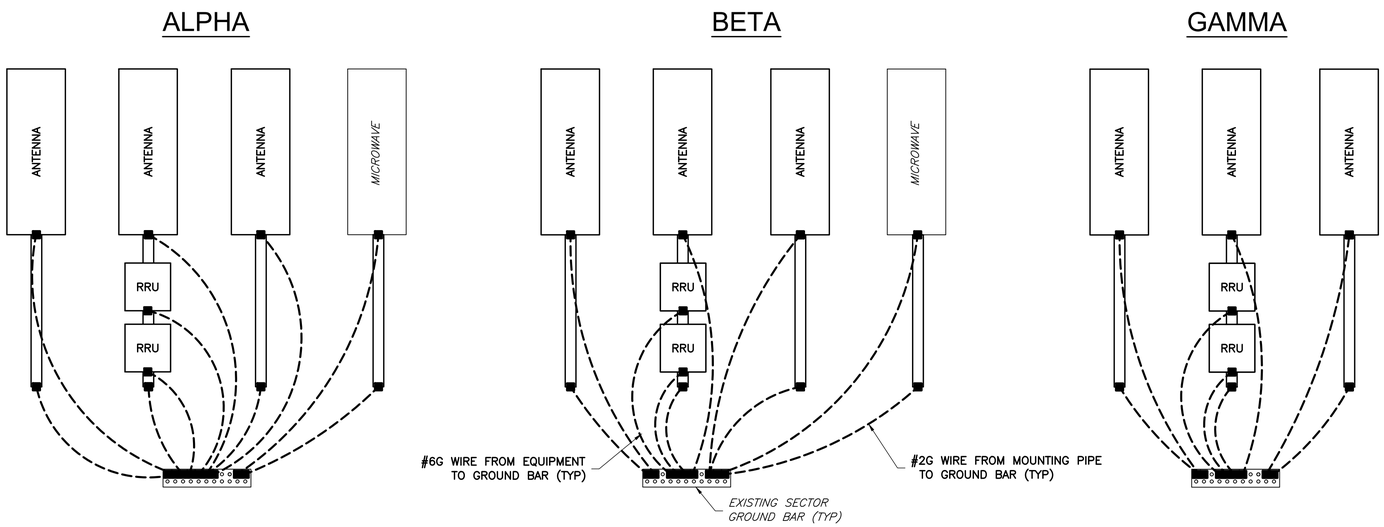

1 / G-1 ANTENNA GROUNDING DETAIL
NTS

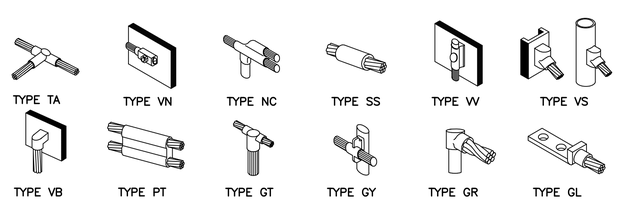

2 / G-1 GROUNDING CONNECTION DETAILS
NOT TO SCALE

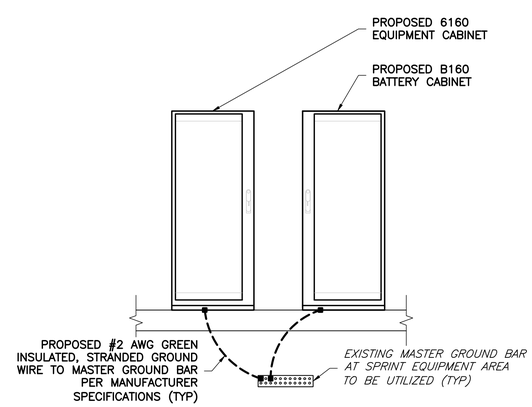

3 / G-1 CABINET GROUNDING DIAGRAM
NOT TO SCALE

GROUNDING LEGEND

- ■ MECHANICAL COMPRESSION CONNECTION
- ▲ CADWELD CONNECTION
- ● EXOTHERMIC WELD CONNECTION
- PROPOSED GROUND WIRING
- EXISTING GROUND WIRING

APPLICANT

Sprint
NOW APART OF T-Mobile
T-MOBILE NORTHEAST LLC

APC REALTY AND EQUIPMENT COMPANY, LLC
6220 SPRINT PARKWAY
OVERLAND PARK, KS 66251
(855) 848-3280

ENGINEER

NB+C TOTALLY COMMITTED.

NB+C ENGINEERING SERVICES, LLC.
6095 MARSHALEE DRIVE, SUITE 300
ELKRIDGE, MD 21075
(410) 712-7092

SITE INFORMATION

7WAC531A
NTM REPL FOR WA23XC350
575 HERNDON PARKWAY
HERNDON, VA 20170
TOWN OF HERNDON

DESIGN RECORD

REVISIONS

REV	DATE	DESCRIPTION	BY
1	05/24/21	REV PER SCREEN WALL	AMM
0	03/31/21	FINAL CD'S	DH

PROFESSIONAL STAMP

STATE OF MARYLAND
TRENT TRAVIS SNARR
55491
PROFESSIONAL ENGINEER

PROFESSIONAL CERTIFICATION. I HEREBY CERTIFY THAT THESE DOCUMENTS WERE PREPARED OR APPROVED BY ME, AND THAT I AM A DULY LICENSED PROFESSIONAL ENGINEER UNDER THE LAWS OF THE STATE OF MARYLAND, LICENSE NO. 55491, EXPIRATION DATE 01/08/2022

ENGINEER

TRENT TRAVIS SNARR, P.E.
MARYLAND PROFESSIONAL ENGINEER
LICENSE #55491

SHEET TITLE

GROUNDING DETAILS

SHEET NUMBER

G-1

STRUCTURAL NOTES

STRUCTURAL DESIGN CRITERIA:

STRUCTURAL DESIGN IS BASED ON THE 2015 VIRGINIA UNIFORM STATEWIDE BUILDING CODE.

LOCATION: TOWN OF HERNDON

CONSTRUCTION MATERIAL SELF WEIGHT PER ASCE 7–10

1. THE LATEST EDITION OF THE FOLLOWING SPECIFICATIONS SHALL GOVERN:
   A. AISC – "ALLOWABLE STRESS DESIGN SPECIFICATION FOR STRUCTURAL STEEL BUILDINGS".
   B. AISC – "CODE OF STANDARD PRACTICE FOR STEEL BUILDINGS AND BRIDGES".
   C. AWS – "D1.1 STRUCTURAL WELDING CODE – STEEL".
2. MATERIAL, UNLESS OTHERWISE NOTED, SHALL CONFORM TO THE FOLLOWING ASTM SPECIFICATIONS

STRUCTURAL WIDE FLANGE & M SHAPES	A992 OR A572 Fy = 50KSI
OTHER STRUCTURAL SHAPES AND PLATES	A36 Fy = 36 KSI
STRUCTURAL TUBING	A500, GRADE B Fy = 46 KSI
HIGH STRENGTH BOLTS	A325
THREADED RODS	A354, GRADE BC
ANCHOR BOLTS	A325 OR A354 BC
PIPE (HANDRAIL)	SCH 40 PIPE

3. ALL WELDING SHALL BE IN ACCORDANCE WITH AWS D1.1 USING E70XX ELECTRODES. UNLESS OTHERWISE NOTED PROVIDE CONTINUOUS MINIMUM SIZED FILLET WELDS PER AISC REQUIREMENTS.
4. HOLES IN STEEL SHALL BE DRILLED OR PUNCHED. ALL SLOTTED HOLES SHALL BE PROVIDED WITH SMOOTH EDGES. BURNING OF HOLES AND TORCH CUTTING AT THE SITE IS NOT PERMITTED. ALL HOLES IN BEARING PLATES SHALL BE DRILLED.
5. ALL STEEL TO BE HOT–DIPPED GALVANIZED AFTER FABRICATION PER ASTM A123.
6. EPOXY ANCHORS TO BE INSTALLED PER MANUFACTURER'S SPECIFICATIONS.
7. ALL BOLTS SHALL BE TIGHTENED USING TURN–OF–THE–NUT METHOD PER AISC SPECIFICATIONS USING STANDARD HOLES.
8. CONTRACTOR TO FIELD VERIFY ALL DIMENSIONS AND FIT PRIOR TO FABRICATION.
10. THE FABRICATOR SHALL FURNISH CHECKED SHOP AND ERECTION DRAWINGS TO THE ENGINEER, AND OBTAIN APPROVAL PRIOR TO FABRICATING ANY STRUCTURAL STEEL. SHOP DRAWINGS SHALL CONFORM TO AISC "DETAILING FOR STEEL CONSTRUCTION".

NOTE:
FINAL MOUNTING AND SCREEN WALL DETAILS ARE PENDING.

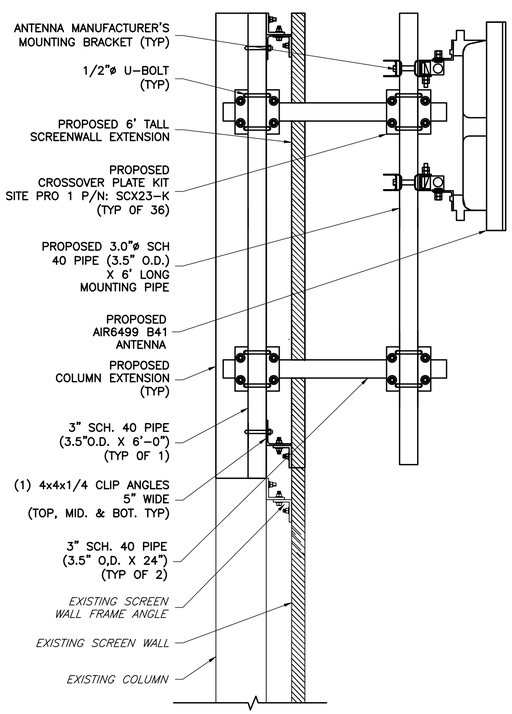

1 / ST-1 AIR 6449 B41 ANTENNA MOUNTING DETAIL
NOT TO SCALE

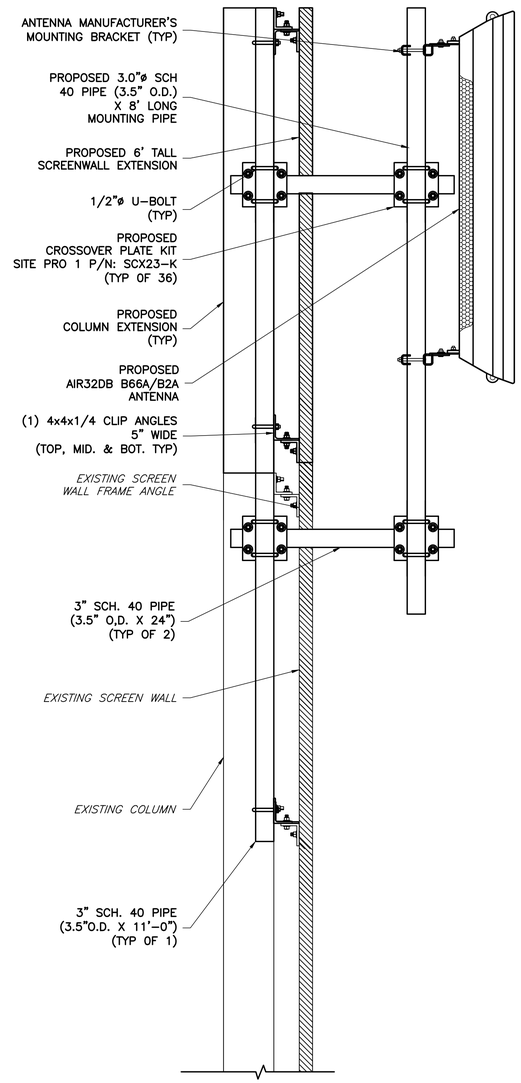

2 / ST-1 AIR32DB B66A/B2A ANTENNA MOUNTING DETAIL
NOT TO SCALE

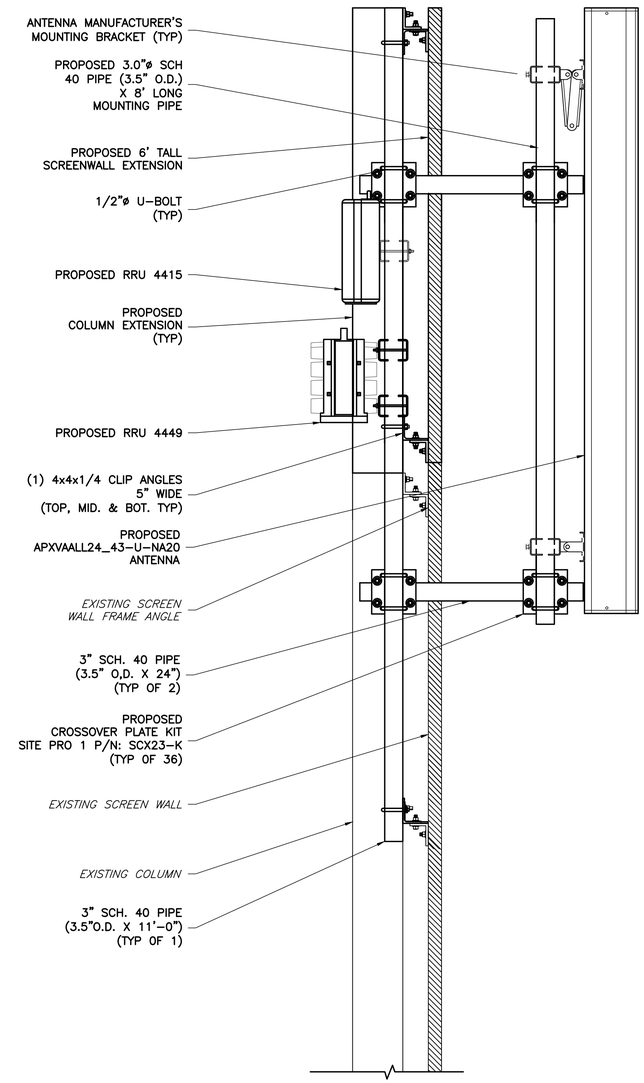

3 / ST-1 APXVAALL24_43-U-NA20 ANTENNA MOUNTING DETAIL
NOT TO SCALE

APPLICANT

Sprint
NOW APART OF T-Mobile
T-MOBILE NORTHEAST LLC

APC REALTY AND EQUIPMENT COMPANY, LLC
6220 SPRINT PARKWAY
OVERLAND PARK, KS 66251
(855) 848-3280

ENGINEER

NB+C TOTALLY COMMITTED.

NB+C ENGINEERING SERVICES, LLC.
6095 MARSHALEE DRIVE, SUITE 300
ELKRIDGE, MD 21075
(410) 712-7092

SITE INFORMATION

7WAC531A
NTM REPL FOR WA23XC350
575 HERNDON PARKWAY
HERNDON, VA 20170
TOWN OF HERNDON

DESIGN RECORD

REVISIONS

REV	DATE	DESCRIPTION	BY
1	05/24/21	REV PER SCREEN WALL	AMM
0	03/31/21	FINAL CD'S	DH

PROFESSIONAL STAMP

STATE OF MARYLAND
05/19/21
55491
PROFESSIONAL ENGINEER

PROFESSIONAL CERTIFICATION. I HEREBY CERTIFY THAT THESE DOCUMENTS WERE PREPARED OR APPROVED BY ME, AND THAT I AM A DULY LICENSED PROFESSIONAL ENGINEER UNDER THE LAWS OF THE STATE OF MARYLAND, LICENSE NO. 55491, EXPIRATION DATE 01/08/2022

ENGINEER

TRENT TRAVIS SNARR, P.E.
MARYLAND PROFESSIONAL ENGINEER
LICENSE #55491

SHEET TITLE

ANTENNA MOUNTING DETAILS

SHEET NUMBER

ST-1

Attachment #3

Site Name: 7WAC531A
Wireless Communication Facility
575 Herndon Pkwy
Herndon, VA 20170

Photograph Information:
View 1-Parking Lot
View from the Northwest
Showing the Existing Site

NB+C™
TOTALLY COMMITTED.

Site Name: 7WAC531A
Wireless Communication Facility
575 Herndon Pkwy
Herndon, VA 20170

Photograph Information:
View 1-Parking Lot
View from the Northwest
Showing the Proposed Site

NB+C™
TOTALLY COMMITTED.

Site Name: 7WAC531A
Wireless Communication Facility
575 Herndon Pkwy
Herndon, VA 20170

Photograph Information:
View 2-Ramp
View from the Southeast
Showing the Existing Site

NB+C
TOTALLY COMMITTED.

Site Name: 7WAC531A
Wireless Communication Facility
575 Herndon Pkwy
Herndon, VA 20170

Photograph Information:
View 2-Ramp
View from the Southeast
Showing the Proposed Site

NB+C
TOTALLY COMMITTED.

Site Name: 7WAC531A
Wireless Communication Facility
575 Herndon Pkwy
Herndon, VA 20170

Photograph Information:
View 3-Parking Garage
View from the South
Showing the Existing Site

NB+C™
TOTALLY COMMITTED.

Site Name: 7WAC531A
Wireless Communication Facility
575 Herndon Pkwy
Herndon, VA 20170

Photograph Information:
View 3-Parking Garage
View from the South
Showing the Proposed Site

NB+C™
TOTALLY COMMITTED.

Site Name: 7WAC531A
Wireless Communication Facility
575 Herndon Pkwy
Herndon, VA 20170

Photograph Information:
View 4-Herndon Pkwy
View from the Northeast
Showing the Existing Site

NB+C™
TOTALLY COMMITTED.

Site Name: 7WAC531A
Wireless Communication Facility
575 Herndon Pkwy
Herndon, VA 20170

Photograph Information:
View 4-Herndon Pkwy
View from the Northeast
Showing the Proposed Site

NB+C™
TOTALLY COMMITTED.

ARCHITECTURAL REVIEW BOARD STANDARDS FOR DESIGN REVIEW
Taken from ARB Charter – Chapter 58 (Planning) of Herndon Town Code (2000)

DIVISION 4. STANDARDS* _____
***Charter references:** Standards and purpose, § 7.4:1(c). _____

Sec. 58-96. Design criteria.
The board of architectural review and, on appeal, the town council shall use the following standards and criteria in considering applications filed under this article:

(1) Whether or not the proposed architectural design is suitable for a good suburban community in terms of external architectural features, including signs subject to public view, general design and arrangement, texture, color, line, mass, dimension, material and lighting.

(2) Whether or not the proposed structure, building or improvement is compatible with existing well-designed structures, acceptable to the board, in the vicinity and in the town as a whole.

(3) Whether or not, and to what extent, the proposed structure, building or improvement would promote the general welfare and protect the public health, safety and morals by tending to maintain or augment the town's tax base as a whole, generating business activity, maintaining and creating employment opportunity, preserving historical sites and structures and making the town a more attractive and desirable place in which to live.

(4) Whether or not proposed freestanding buildings use the same or architecturally harmonious materials, color, texture and treatment for all exterior walls; and in the case of partially freestanding buildings, whether or not the same or architecturally harmonious materials, color, texture and treatment are used on all portions of all exterior walls exposed to public view.

(5) Whether or not the combination of architectural elements proposed for a structure, building or improvement, in terms of design, line, mass, dimension, color, material, texture, lighting, landscaping and roofline and height conform to accepted architectural principles for permanent buildings as contrasted with engineering standards designed to satisfy safety requirements only; and exhibit external characteristics of demonstrated architecture and aesthetic durability.

(6) Whether or not, in terms of design, material, texture, color, lighting, landscaping, dimension, line, mass or roof line and height, the proposed structure, building or improvement is designed to serve primarily as an advertisement or commercial display, exhibits exterior characteristics likely to deteriorate rapidly, would be of temporary or shortterm architectural or aesthetic acceptability, would be plainly offensive to human sensibilities or would otherwise constitute a reasonable foreseeable detriment to the community.

(Code 1992, § 4-16)

TOWN OF Herndon VIRGINIA

STAFF REPORT
Architectural Review Board
July 7, 2021

Title: ARB #21-010; Wall Sign; 12930 Worldgate Drive

Staff Contact: Bryce A. Perry
Deputy Director of Community Development
bryce.perry@herndon-va.gov
(703) 787-7380

Summary Information

Applicant Request	Installation of a new tenant identification wall sign		
Address	12930 Worldgate Drive		
Fairfax County Tax Map Number	0163-02-0028C		
Owner	Monument III Owner, LLC.		
Applicant	George Marino, Service Neon Signs, Inc.		
Business/Organization	BTI360		
Property Use	Office		
Zoning District	PD-W; Planned Development-Worldgate		
Adjacent Zoning	**North:** PD-W; Planned Development-Worldgate **South:** PD-W; Planned Development-Worldgate	**East:** PD-W; Planned Development-Worldgate **West:** PD-W; Planned Development-Worldgate	
Building Type(s)	Multi-story concrete and glass encased office building	**Date of Construction:**	2006
Architectural Style(s)	Post-modern		
Exterior Material(s)	Precast concrete, glass		
Neighborhood Design Profile	Mixed use developed neighborhood, with multi-family building and mid-rise offices		
Comprehensive Plan Land Use Designation	Regional Corridor Mixed Use		

Staff Recommendation	Staff is recommending approval in accordance with the draft resolution (Attachment #1)

Case Details

Proposal:

This application proposes to install a wall sign on the south building façade facing Worldgate Drive. It would be positioned on the upper parapet, indented to the left side of the façade. The sign would be constructed of internally illuminated, individually mounted channel letters and logo. The letters would have 5" white returns, black trimcaps, and perforated vinyl overlaid faces that show black during daytime and white at night. It would be a single line sized at 4'-9" high and 25' long. Attachment #3 shows the sign design provided by the applicant.

Site Description:

This parcel is part of a multi-building office complex with coordinated buildings and shared parking. The front of the building is improved with a surface parking lot and shared access is gained from the parcels on either side. A multi-family development immediately abuts the rear of the property. The proposed sign would not be visible from the residential properties and instead have visible to the south facing both Worldgate Drive and the Dulles Toll Road. The location of the site is shown in the map below.

Location Map

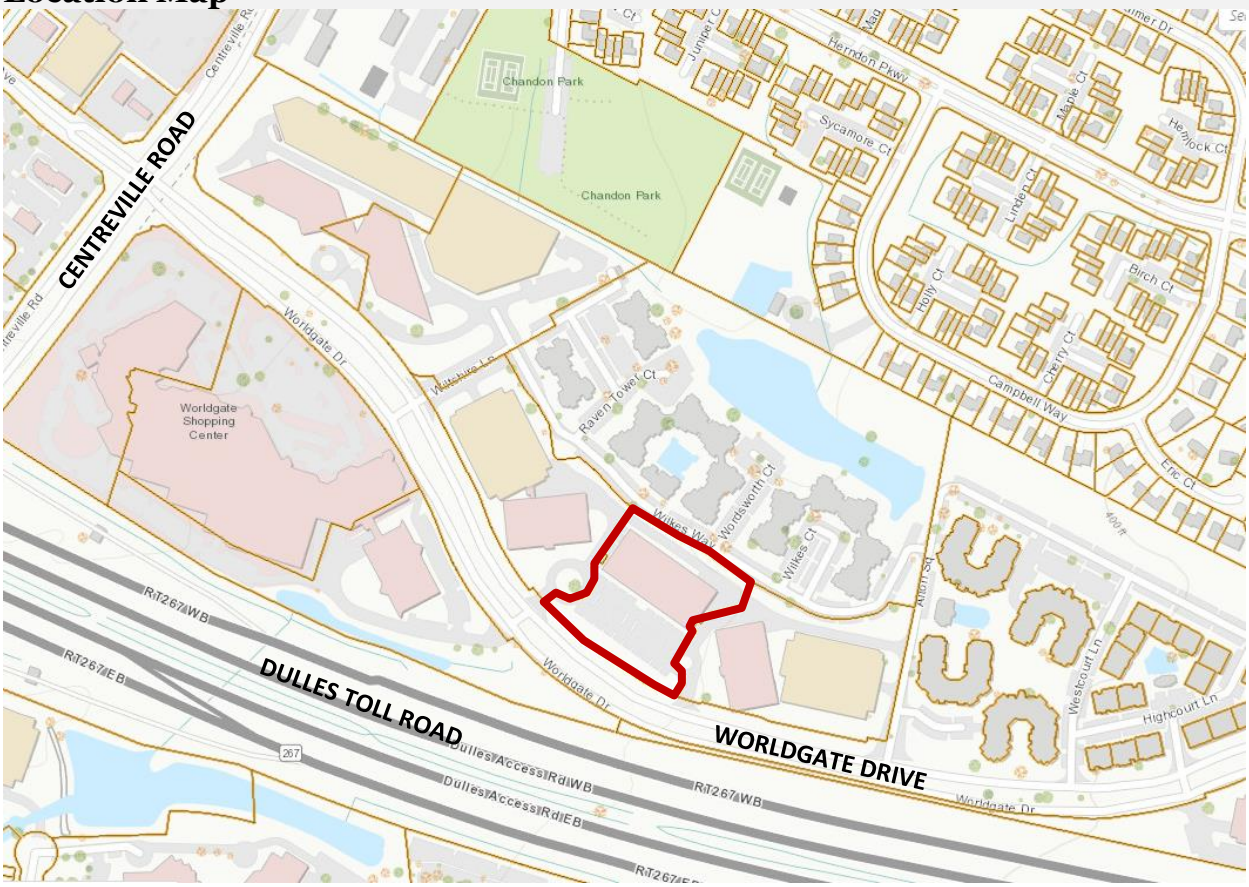

Applicable Design Guidance:

- Town Code of Ordinances, Section 58-96 – *Design criteria* (Attachment #4)

Staff Analysis

1. Staff has found that the proposed sign meets the applicable standards and requirements of the Town of Herndon Zoning Ordinance.

2. With the findings expressed below, staff believes the proposed sign generally complies with the applicable design criteria within the Town's Architectural Control District as specified in Section 58-96 of the Town Code of Ordinances (Attachment #5).

    a. At over 100SF this is a very large sign however its size is suitable for the scale of the building on which it is attached and its location on the upper parapet. Its size

is consistent with the size of the signs approved and installed in similar locations on both this building and the two other matching Monument buildings on the adjacent parcels.

b. The sign has been thoughtfully aligned within the space it is installed; centered both vertically and horizontally between parapet features and again consistent with the placement of similar signs on this building and the other Monument building on adjacent properties.
c. Though the building abuts a residential neighborhood, the sign would not be visible from the that viewshed. It is instead intended for visibility southwards towards the Dulles Toll Road.

Staff Recommendation:

ARB Alternatives:	1. Resolution to deny the application. 2. Resolution to approve the application as submitted. 3. Resolution to approve with condition(s). 4. The ARB may also continue the review of this item to a future public hearing
Staff Recommendation:	Staff is recommending approval in accordance with Alternative #2 and the draft resolution (Attachment #1)

Report Attachments

1.	ARB #21-010 Draft Resolution
2.	Streetview Images
4.	Proposed Sign Drawings & Details
5.	Town's Zoning Ordinance, Section 78-60.3.

Staff Signatures

Bryce A. Perry
Deputy Director of Community Development

TOWN OF HERNDON, VIRGINIA
ARCHITECTURAL REVIEW BOARD

DRAFT RESOLUTION

July 21, 2021

Resolution- to approve ARB #21-010, installation of a wall sign located at 12930 Worldgate Drive, Fairfax County Tax Map Number 0163-02-0028C.

WHEREAS, the applicant has submitted an application to install a wall sign located the above referenced address; and

WHEREAS, the proposed wall sign complies with the applicable zoning ordinance regulations as specified in the Town of Herndon Zoning Ordinance Article XIV; and

WHEREAS, the Town of Herndon Architectural Review Board has reviewed this application and has found that the proposed wall sign complies with the applicable Design Criteria as stated in the Town of Herndon Code of Ordinances Section 58-96; and

WHEREAS, the Town of Herndon Architectural Review Board has held a duly advertised public hearing concerning this application on July 21, 2021.

NOW THEREFORE, BE IT RESOLVED that the Architectural Review Board of the Town of Herndon, Virginia, HEREBY:

Approves ARB #21-010, for a wall sign located at 12930 Worldgate Drive in Herndon, VA in substantial conformance with the design shown in the case materials reviewed by the ARB.

Attachment #2

Streetview Images – 12930 Worldgate Drive– ARB#21-010

Attachment #3

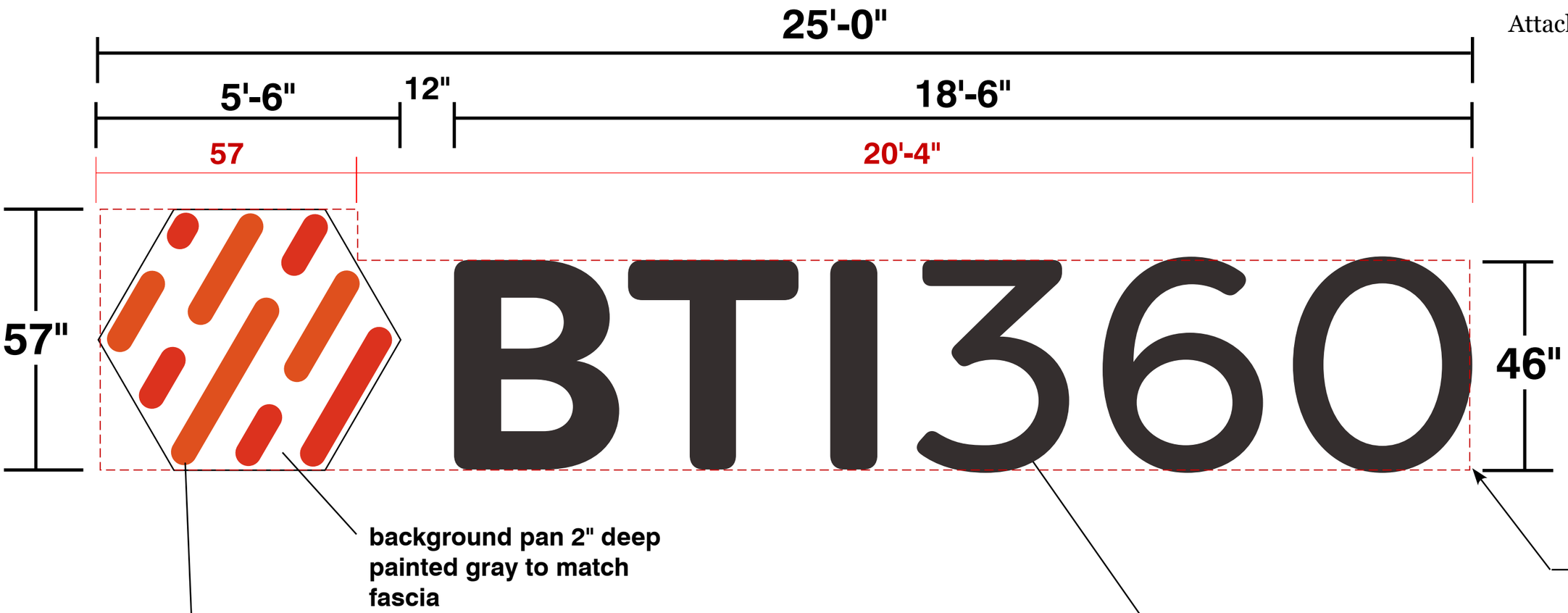

Ind channels w/ 3" deep returns
pre painted white w/ orange trim cap
3/16" #7328 white plex faces overlaid w/
3m orange 3630-44 & lt. tomato red 3630-43.

white leds

Ind channels w/ 5" deep returns
pre painted white w/ black trim cap
3/16" #7328 white plex faces overlaid w/
3m 3635-222 dual color black vinyl
applied to letter faces

white leds

SIGN LAYOUT
SCALE: 1/2 "= 1'- 0"

3.83' x 20.33' = 77.86 sf
4.75' x 4.75' = 22.56 sf
100.42 SF

SERVICE NEON SIGNS INC
6611 IRON PLACE
SPRINGFIELD, VA.
22151
(703) 354-3000 TELEPHONE
(703) 354-5810 FAX

CUSTOMERS NAME: BTI360

LOCATION: 12930 WORLDGATE DR. HERNDON, VA

DRAWING #: 48486
DATE: 3/22/2021
SALESPERSON: George Marino, III
CUSTOMER APPROVAL:

this design is the property of Service Neon Signs. unauthorized use in whole or in part prohibited, violators will be prosecuted in the fullest extent of the law.

This sign is intended to be installed in accordance with the requirements of Article 600 of the National Electrical Code and/or other applicable local codes. This includes proper grounding and bonding of the sign.

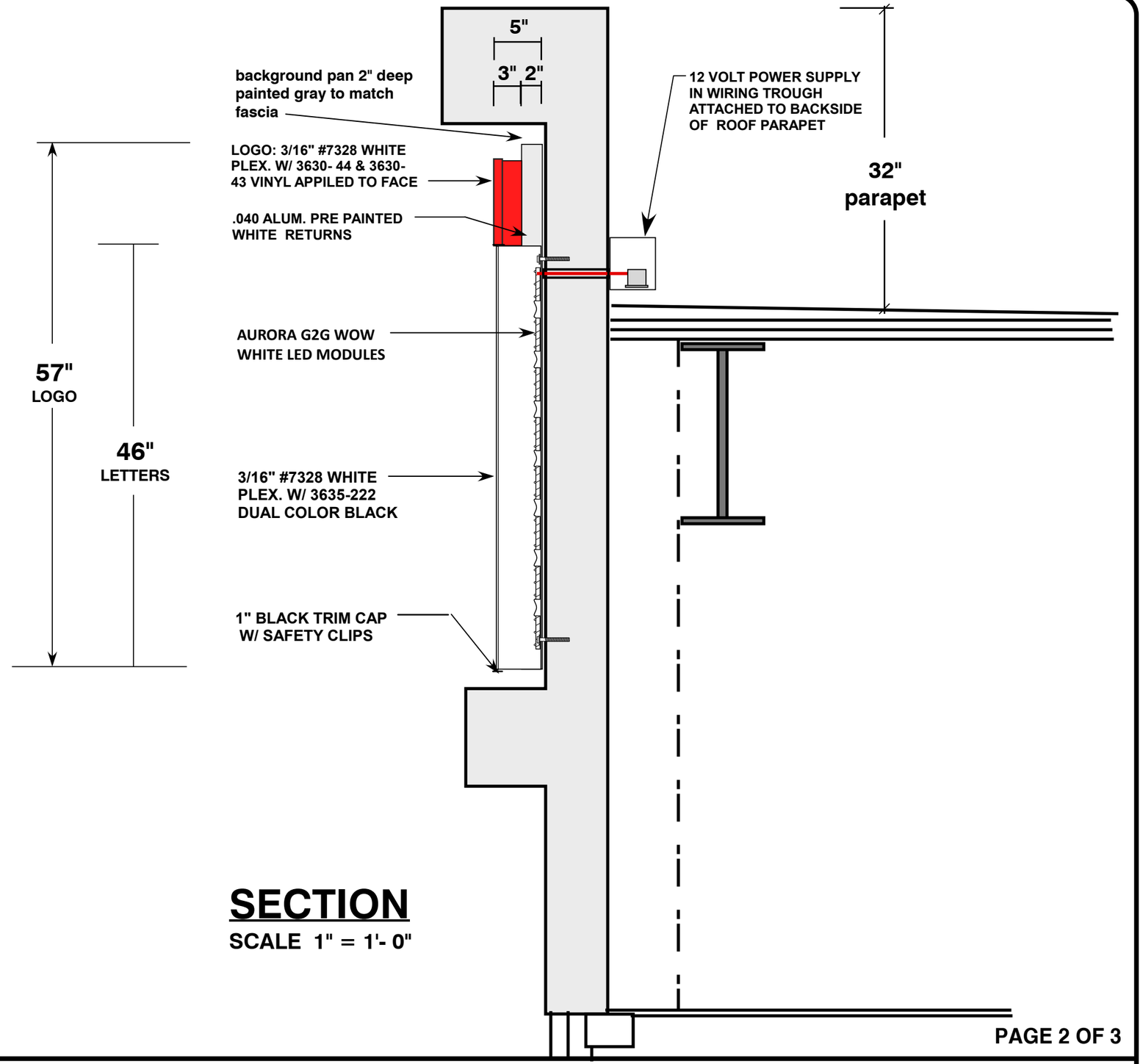

SECTION

SCALE 1" = 1'- 0"

SERVICE NEON SIGNS INC

6611 IRON PLACE
SPRINGFIELD, VA.
22151
(703) 354-3000 TELEPHONE
(703) 354-5810 FAX

CUSTOMERS NAME
BTI360

LOCATION
12930 WORLDGATE DR.
HERNDON, VA

DRAWING #	DATE
48486	3/22/2021
SALESPERSON: George Marino, III	CUSTOMER APPROVAL

this design is the property of Service Neon Signs. unauthorized use in whole or in part prohibited, violators will be prosecuted in the fullest extent of the law.

This sign is intended to be installed in accordance with the requirements of Article 600 of the National Electrical Code and/or other applicable local codes. This includes proper grounding and bonding of the sign.

FRONT ELEVATION SCALE 1/16" = 1'-0"

night view

SERVICE NEON SIGNS INC
6611 IRON PLACE
SPRINGFIELD, VA.
22151
(703) 354-3000 TELEPHONE
(703) 354-5810 FAX

CUSTOMERS NAME	LOCATION	DRAWING #	DATE
BTI360	12930 WORLDGATE DR. HERNDON, VA	48486	3/22/2021
		SALESPERSON: George Marino, III	CUSTOMER APPROVAL

this design is the property of Service Neon Signs. unauthorized use in whole or in part prohibited, violators will be prosecuted in the fullest extent of the law.

This sign is intended to be installed in accordance with the requirements of Article 600 of the National Electrical Code and/or other applicable local codes. This includes proper grounding and bonding of the sign.

ARCHITECTURAL REVIEW BOARD STANDARDS FOR DESIGN REVIEW
Taken from ARB Charter – Chapter 58 (Planning) of Herndon Town Code (2000)

DIVISION 4. STANDARDS* _____
***Charter references:** Standards and purpose, § 7.4:1(c). _____

Sec. 58-96. Design criteria.
The board of architectural review and, on appeal, the town council shall use the following standards and criteria in considering applications filed under this article:

(1) Whether or not the proposed architectural design is suitable for a good suburban community in terms of external architectural features, including signs subject to public view, general design and arrangement, texture, color, line, mass, dimension, material and lighting.

(2) Whether or not the proposed structure, building or improvement is compatible with existing well-designed structures, acceptable to the board, in the vicinity and in the town as a whole.

(3) Whether or not, and to what extent, the proposed structure, building or improvement would promote the general welfare and protect the public health, safety and morals by tending to maintain or augment the town's tax base as a whole, generating business activity, maintaining and creating employment opportunity, preserving historical sites and structures and making the town a more attractive and desirable place in which to live.

(4) Whether or not proposed freestanding buildings use the same or architecturally harmonious materials, color, texture and treatment for all exterior walls; and in the case of partially freestanding buildings, whether or not the same or architecturally harmonious materials, color, texture and treatment are used on all portions of all exterior walls exposed to public view.

(5) Whether or not the combination of architectural elements proposed for a structure, building or improvement, in terms of design, line, mass, dimension, color, material, texture, lighting, landscaping and roofline and height conform to accepted architectural principles for permanent buildings as contrasted with engineering standards designed to satisfy safety requirements only; and exhibit external characteristics of demonstrated architecture and aesthetic durability.

(6) Whether or not, in terms of design, material, texture, color, lighting, landscaping, dimension, line, mass or roof line and height, the proposed structure, building or improvement is designed to serve primarily as an advertisement or commercial display, exhibits exterior characteristics likely to deteriorate rapidly, would be of temporary or shortterm architectural or aesthetic acceptability, would be plainly offensive to human sensibilities or would otherwise constitute a reasonable foreseeable detriment to the community.

(Code 1992, § 4-16)