TOWN OF HERNDON, VIRGINIA
ARCHITECTURAL REVIEW BOARD
WORK SESSION AGENDA
JUNE 5, 2019
HERNDON COUNCIL CHAMBERS BUILDING
765 LYNN STREET
7:30 P.M.

CALL TO ORDER

1. Determination of Quorum

PUBLIC HEARINGS

2. **APPLICATION FOR NEW CONSTRUCTION, ARB #19-12,** to consider an application to construct a new equipment shelter to screen a proposed emergency backup power generator at a Town-owned water tank site located at 624 Alabama Drive, Herndon, Virginia, located southeast of the intersection of Alabama Drive and Missouri Avenue and northwest of the intersection of Alabama Drive and Van Buren Street, and further identified as Fairfax County Tax Map 0162-02-0148. The property is zoned Residential, R-10 and consists of 42,079 square feet of land. Owner: Town of Herndon, Virginia. Applicant: T-Mobile Northeast, LLC. Applicant's Representative: James Relihan, Agent. ***(Continued from May 15, 2019 ARB public hearing.)***

3. **APPLICATION FOR A WALL OR WINDOW SIGN, ARB #19-22,** to consider an application to replace two existing wall signs with two new wall signs on the multi-tenant commercial building and new tenant signage on the commercial center's monument sign located at 905 Herndon Parkway, Herndon, Virginia, located south of the intersection of Elden Street and Herndon Parkway, and further identified as Fairfax County Tax Map 0161-02-0016D2. The property is zoned CS, Commercial Services, and consists of 71,939 square feet of land. Owner/Applicant: CH Retail Fund IIDC Metro Herndon Parkway, LLC c/o Lindsey, Pfisterer, Rosenthal Properties. Applicant's Representative: Frank Cavanaugh, ARK Signs.

COMMENTS

4. Comments from the Staff Members

5. Comments from the Board Members

ADJOURNMENT

TOWN OF Herndon VIRGINIA

MEMORANDUM

To: Chairman Walker and Members of the Architectural Review Board

From: Christopher J. Garcia, AICP, Community Design Planner/Deputy Zoning Administrator

Date: May 31, 2019

Subject: ARB #19-12, 624 Alabama Drive Generator Enclosure – Updates

---

The applicant for the above referenced case, which was continued by the Architectural Review Board (ARB) on March 20, 2019 and May 15, 2019 at the respective ARB Public Hearings, has not completed the administrative site plan review process in accordance with the Town's Zoning Ordinance Section 78-155.6. – "Site plans, Subdivision Plans, Single Lot Development Plans and Building Location Surveys".

As of the date of this memo, the Board may not take action on this case until the administrative site plan review process is complete and the approved site plan is submitted with the current ARB application, as specified in Section 58-96 of the Town Code of Ordinances. If the site plan review process can be completed prior to the June 19, 2019 ARB Public Hearing, the Board may act on the case with the current staff recommendation for approval at that time.

Due to the anticipated completion of the site plan review and approval before June 19th, staff will provide an updated recommendation via staff memo to the Board prior to the public hearing.

Thank you.

TOWN OF Herndon VIRGINIA

STAFF REPORT
Architectural Review Board
May 31, 2019

Case Number & Type: ARB #19-22; Wall Signs
Case Summary: Replace existing wall signs with new corporate business signs on two building elevations
Case Location: 905 Herndon Parkway

Location Map

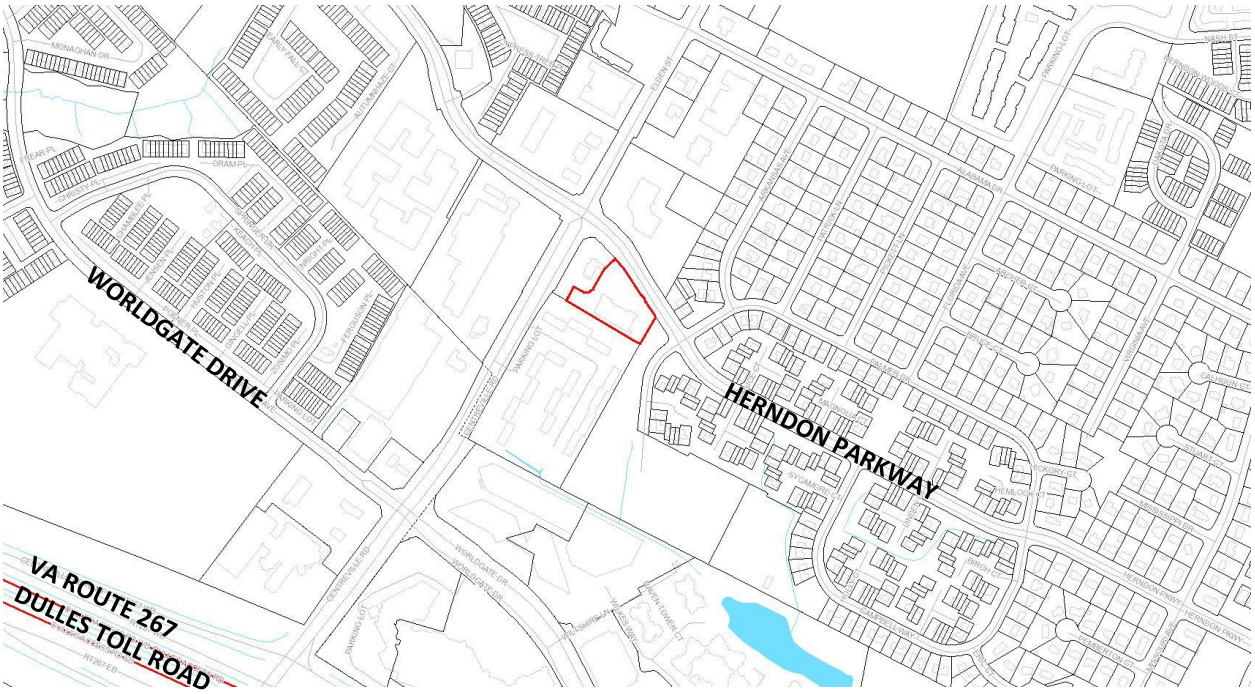

Property Information

Owner / Applicant:	CH Retail Fund IIDC Metro Herndon Parkway, LLC c/o Lindsey, Pfisterer, Rosenthal Properties		
Representative:	Frank Cavanaugh, ARK Signs		
Business/Organization:	Potbelly Sandwich Works, LLC		
Property Use:	Multi-tenant, single story commercial		
Zoning District:	CS, Commercial Services		
Adjacent Zoning:	**North:** CO, Commercial Office	**East:** PD-R, Planned Development - Residential	
	South: CO, Commercial Office	**West:** CS – Commercial Services	
Associated Cases:	ARB #07-29		
Building Type(s):	Single-story steel framed with composite exterior materials	**Date of Construction:**	2007
Architectural Style(s):	Post-modern, typical suburban commercial /retail expression		

Exterior Material(s):	Composite – brick and stone veneers, typical retail metal/glass storefronts, precast stone accents with a standing seam metal roof
Neighborhood Design Profile:	Existing commercial uses with planned residential uses adjacent to the subject property

Case Details

Case Description:

The proposed wall signs would display the business name for the existing restaurant tenant with a newer corporate business sign design than the existing signs on the north and west elevations. The new signs would be centered at a maximum height of 20' over the existing business entry doors on the north elevation; and positioned in the same location of the existing sign off-centered on the west elevation. The applicant has proposed a second option for the west elevation wall sign which in the wall sign can be centered over the first bay of storefront windows. The application also indicates new or different awnings over the storefront window systems which are not to be considered as a part of this case.

The overall sign dimensions for the north elevation sign would be 3'-11"' tall by 7'-7" wide by 6" thick/deep. The overall sign dimensions for the west elevation sign would be 5'-3" tall by 10'-1"wide by 6" thick/deep. The sign would be constructed of a fabricated aluminum 2" deep nested pan panel in brown (PMS 15454C Brown) and yellow (PMS 1235 Yellow) color to serve as the sign trim and painted two-tone green colors (PMS 5615C Green with an 81% tint for the symbol pattern) to serve as the background for the corporate symbol and sign lettering. The corporate logo/symbol will be fabricated 2.5" deep reverse channel with the graphics routed out an applied 3M translucent film layers in 3M Sunflower Yellow, black and white to compose the graphic symbol and colors. The "Potbelly Sandwich Shop" lettering will be a fabricated 3.5" deep aluminum channel letters with Yellow Plexiglass faces retained by a Black Jewelite color trim. The signs will be internally lit and backlit for the Potbelly corporate symbol using white LED lights. The entire sign composition(s) will be mounted to the existing brick façade(s) using 3/8" wedge anchors.

In addition, the application proposes to replace an existing sign panel on the Herndon Parkway Crossing monument sign with a white Lexan® face and matte black translucent film for the sign lettering.

Using appropriate method for calculating the wall sign area(s) found in the Town's Zoning Ordinance, the signs will cover 27.4 square feet of surface area on the north elevation and 53.1 square feet of surface area on the elevation (Attachments #1, #2, #3, and #4).

Case Background:

The tenant space occupied by this business was the subject of a previous ARB case, ARB #07-29, for which the existing signage was approved. In the previous case, the tenant proposed the exact amount of sign area and location(s) as is being proposed in this current application, only with updated corporate sign designs being presented.

Applicable Design Guidelines & Standards:

- Town Zoning Ordinance, Section, 78-140.6. - General standards for all signs
- Town Zoning Ordinance Section 78-141.4. - Sign standards for commercial districts
- Town Code of Ordinances, Section 58-96 Design criteria

Staff Analysis

1. The application proposes a total of 80.5 square feet of signage between two wall signs to be placed along two elevations having frontage along Elden Street and Herndon Parkway; and places each sign no higher than 20' on the facades, in either case. Section 78-141.4. - Sign standards for commercial districts, Table 141.4(a) specifies that one (1) square foot of sign area for each linear foot of frontage is authorized in the CS zoning district with a maximum of 150 square per sign. In this case, the west elevation is considered a street facing façade and thus the sign may be placed in either location proposed by the applicant. The proposed signage meets the location, size, and number standards of the referenced zoning ordinance section.

2. The proposed signs meet the Town Zoning Ordinance, Section, 78-140.6. - General standards for all signs regarding, the sign types, design, placement, and illumination.

3. The proposed sign generally complies with the applicable design criteria within the Town's Architectural Control District as specified in Section 58-96 of the Town Code of Ordinances (Attachment #5). However, in this case, staff finds that the proposed sign location(s) on the west elevation are somewhat awkward and the Board should consider placement of the west elevation sign over the second storefront bay, which is closer to center of the elevation and over an existing entrance to the tenant space within the storefront bay while still somewhat visible from Elden Street, which was the purpose of this sign in the previous approval.

Staff Recommendation:

Motion Alternatives:	1. Motion to deny the application. 2. Motion to approve the application as submitted. 3. Motion to approve with condition(s). 4. Motion to continue public hearing to a date certain or the next ARB Public Hearing for action to address a specified design issue or concern of the Board.
Recommended Motion:	Motion for approval of ARB #19-22, in accordance with Alternative #3, with the following condition: 1. Revise the submitted application and sign location on the west elevation to be centered over the second (from the left of the building corner) storefront bay and not higher than the Zoning Ordinance maximum of 20' and to be approved by staff prior to submission of a building permit .

	2. The proposed signs shall be constructed /installed in substantial conformance with the application and supporting materials as submitted May 13, 2019 and any subsequent updates required by the Board to meet Condition #1, as noted.

Report Attachments

1.	Aerial Image
2.	Applicant Letter
3.	Site Photos of Existing Conditions
4.	Site Plan, Sign Elevations, Details and Product Information
5.	Town's Code of Ordinances Division 4 - Standards, Sec. 58-96. (ARB) Design Criteria

Staff Contact

Name/Title:	**Christopher J. Garcia, Community Design Planner**
Phone/Email:	**(703)787-7380; christopher.garcia@herndon-va.gov**

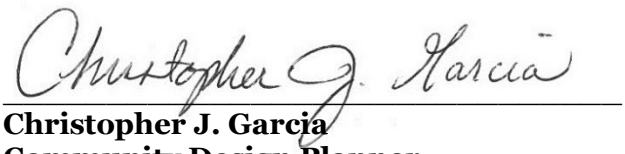

Christopher J. Garcia
Community Design Planner

Bryce A. Perry
Deputy Director

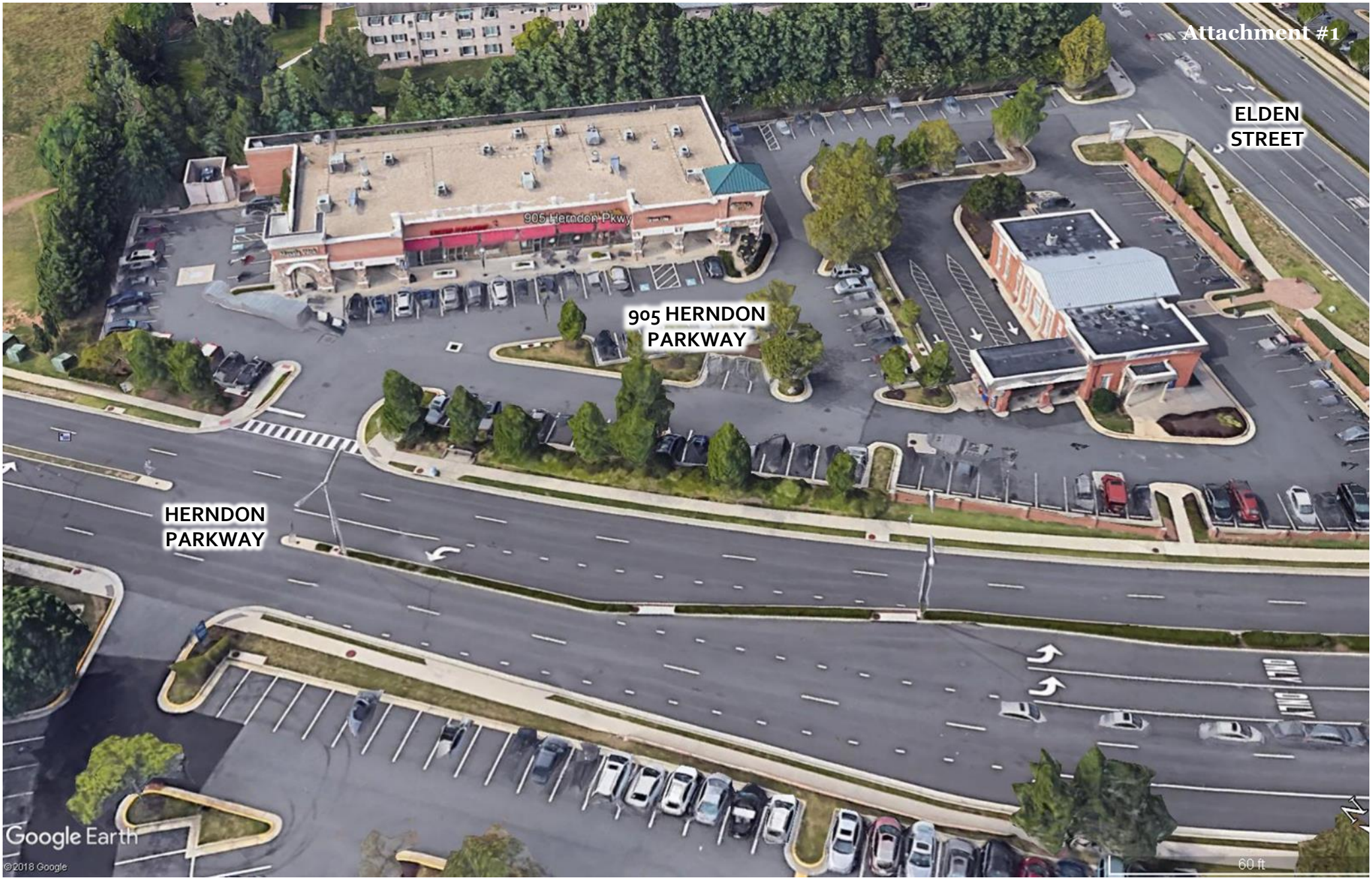

SITE LOCATION – AERIAL PHOTO

Imagery prepared by Town of Herndon
Department of Community Development
Image source: Google Earth © 2018

ARK SIGNS

Town of Herndon:

This letter is to fulfill requirement #1 on your list. The signs are 3'11" x 7'7" and 5'3" x 10' 1 ¼".

Items submitted are 6 sets of plans , 6 sets of pictures and 1 set of samples

Thank you.
Frank Cavanagh, applicant

3622 East Street
Hyattsville, MD 20785
p: 301.384.1300
f: 301.384.1304
www.arksigns.com

HERNDON PARKWAY
CROSSING
Masala Wok
PMPediatrics
GRILL KABOB
Great Clips
STOP

HERNDON PARKWAY
CROSSING
Masala Wok
PMPediatrics
GRILL KABOB
Great Clips
STOP

GRILL KABOB
Great Clips

Potbelly
NO PARKING
STANDING
FIRE LANE

Potbelly

Building Elevation - North

Scale: 1/8"=1'-0"

Building Elevation - North - Photo of Existing Storefront

NATIONAL AWNING & SIGN

Design No.:	**19-0024r6**
Date:	May 10, 2019
Sheet:	1 of 7
Location:	905 Herndon Pkwy
City/State:	Herndon, VA 20170

Contact Information:	
Salesman:	Todd Hefner
Designer:	Trent Schultz
P:817.625.4323	F:817.625.2123
www.awningandsign.com	

Revisions:
R2-Added Pylon faces
R3-Changed pylon colors
R4-Revised per review board

This sign is intended to be installed in accordance with the requirements of article 600 of the National Electrical Code and/or other applicable local codes. This includes proper grounding and bonding of sign.

National Awning & Sign, LLC. does not accept responsibility for obtaining accurate code information for sign size allowance. This document is the property of **National Awning & Sign, LLC** and may not be copied or distributed w/o expressed written consent.

29.7 sq ft

Single Face Standard Display - Channel Letter/ROPT A

Scale: 3/8"=1'-0"

1545C Dk Brown	PMS 1235C Sunflower	Background PMS 5615C	Pattern PMS 5615C 81% tint

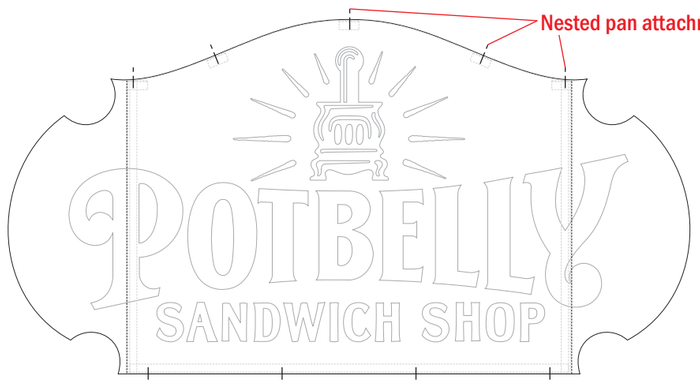

Nested Pan Panel Frame Detail

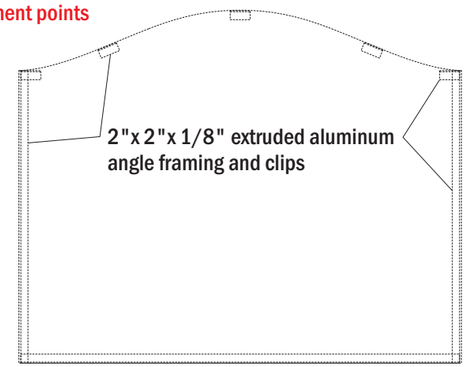

Pan Panel Frame

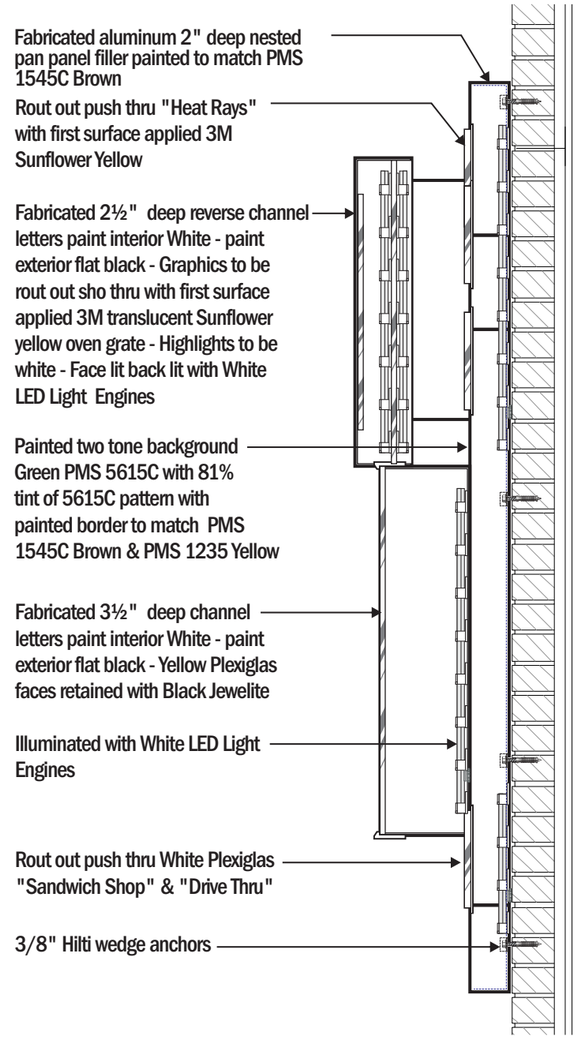

Details

Scale: 1½"=1'-0"

NATIONAL AWNING & SIGN

Design No.:	**19-0024r6**
Date:	May 10, 2019
Sheet:	1 of 7
Location:	905 Herndon Pkwy
City/State:	Herndon, VA 20170

Contact Information:

Salesman:	Todd Hefner
Designer:	Trent Schultz
P:817.625.4323	F:817.625.2123
www.awningandsign.com	

Revisions:
R

This sign is intended to be installed in accordance with the requirements of article 600 of the National Electrical Code and/or other applicable local codes. This includes proper grounding and bonding of sign.

National Awning & Sign, LLC. does not accept responsibility for obtaining accurate code information for sign size allowance. This document is the property of **National Awning & Sign, LLC** and may not be copied or distributed w/o expressed written consent.

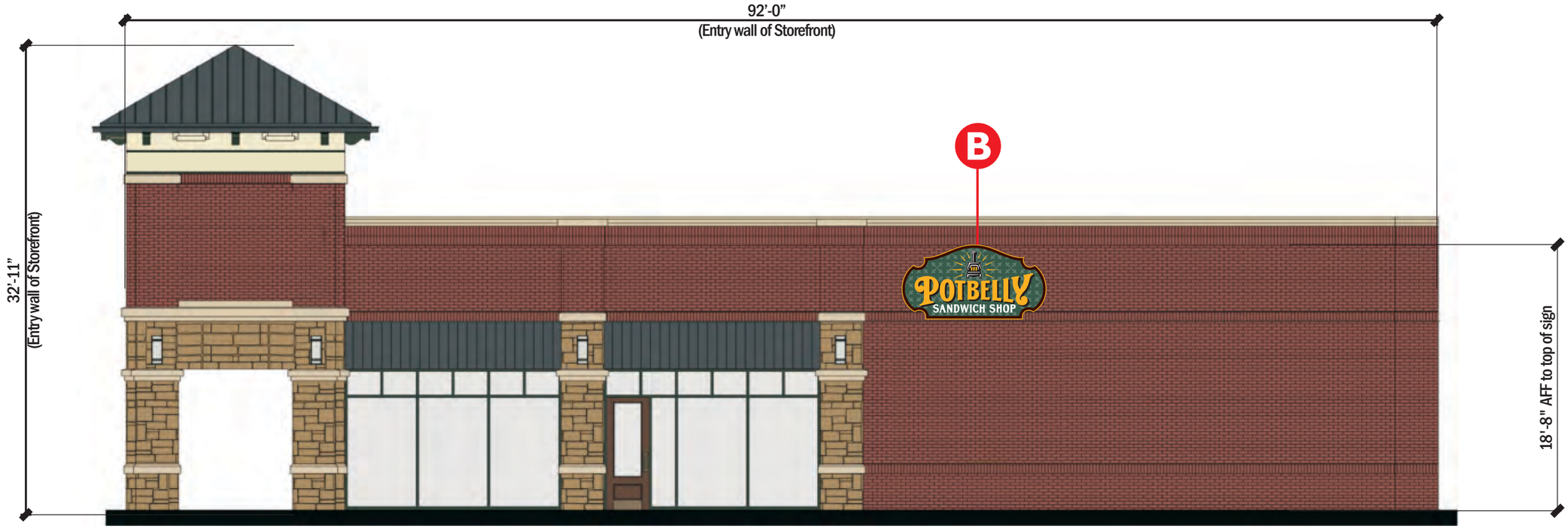

Building Elevation - West - Option A

Scale: 1/8"=1'-0"

Building Elevation - West - Photo of Existing Storefront

NATIONAL AWNING & SIGN

Design No.:	**19-0024r6**
Date:	May 10, 2019
Sheet:	3 of 7
Location:	905 Herndon Pkwy
City/State:	Herndon, VA 20170

Contact Information:

Salesman:	Todd Hefner
Designer:	Trent Schultz
P:817.625.4323	F:817.625.2123
www.awningandsign.com	

Revisions:
R

This sign is intended to be installed in accordance with the requirements of article 600 of the National Electrical Code and/or other applicable local codes. This includes proper grounding and bonding of sign.

National Awning & Sign, LLC. does not accept responsibility for obtaining accurate code information for sign size allowance. This document is the property of **National Awning & Sign, LLC** and may not be copied or distributed w/o expressed written consent.

Building Elevation - West - Option B

Scale: 1/8"=1'-0"

Building Elevation - West - Photo of Existing Storefront

NATIONAL AWNING & SIGN

Design No.:	**19-0024r6**
Date:	May 10, 2019
Sheet:	4 of 7
Location:	905 Herndon Pkwy
City/State:	Herndon, VA 20170

Contact Information:

Salesman:	Todd Hefner
Designer:	Trent Schultz
P.817.625.4323	F.817.625.2123
www.awningandsign.com	

Revisions:
R

This sign is intended to be installed in accordance with the requirements of article 600 of the National Electrical Code and/or other applicable local codes. This includes proper grounding and bonding of sign.

National Awning & Sign, LLC. does not accept responsibility for obtaining accurate code information for sign size allowance. This document is the property of **National Awning & Sign, LLC** and may not be copied or distributed w/o expressed written consent.

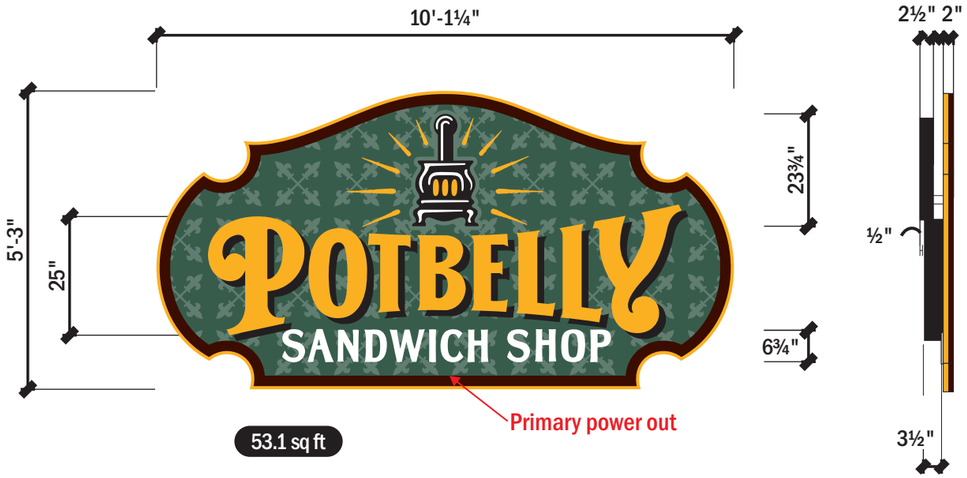

Single Face Standard Display - Channel Letter/ROPT B

Scale: 3/8"=1'-0"

1545C Dk Brown	PMS 1235C Sunflower	Background PMS 5615C	Pattern PMS 5615C 81% tint

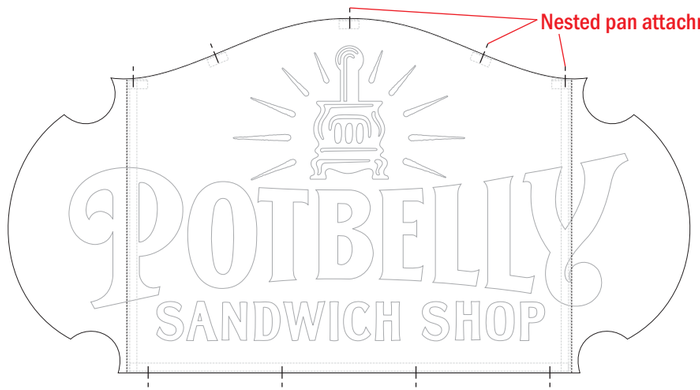

Nested Pan Panel Frame Detail

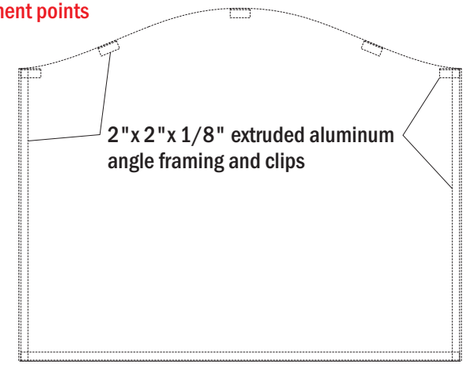

Pan Panel Frame

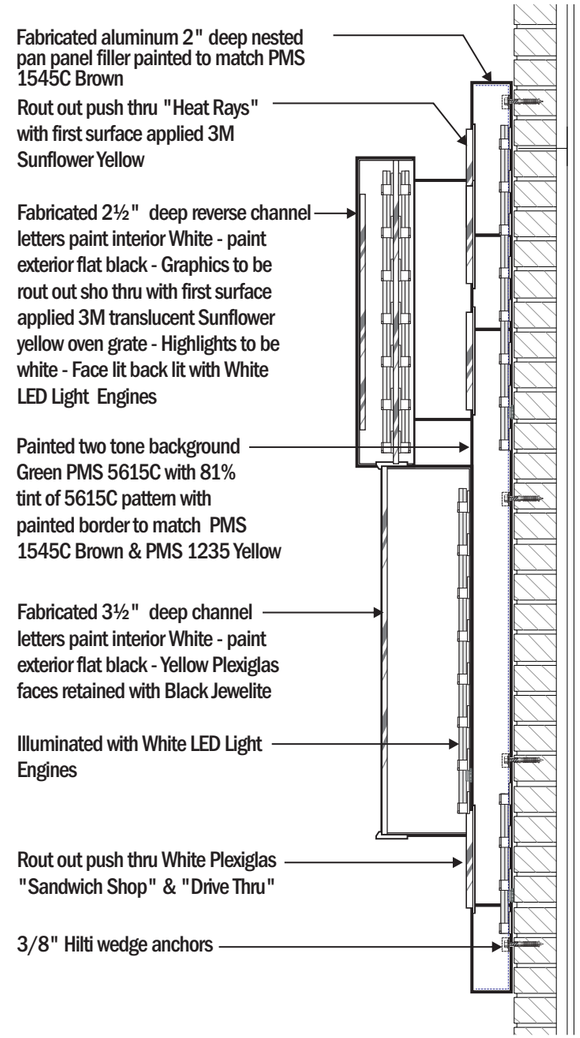

Details

Scale: 1½"=1'-0"

NATIONAL AWNING & SIGN

Design No.:	19-0024r6
Date:	May 10, 2019
Sheet:	5 of 7
Location:	905 Herndon Pkwy
City/State:	Herndon, VA 20170

Contact Information:

Salesman:	Todd Hefner
Designer:	Trent Schultz
P:817.625.4323	F:817.625.2123
www.awningandsign.com	

Revisions:
R

This sign is intended to be installed in accordance with the requirements of article 600 of the National Electrical Code and/or other applicable local codes. This includes proper grounding and bonding of sign.

National Awning & Sign, LLC. does not accept responsibility for obtaining accurate code information for sign size allowance. This document is the property of **National Awning & Sign, LLC** and may not be copied or distributed w/o expressed written consent.

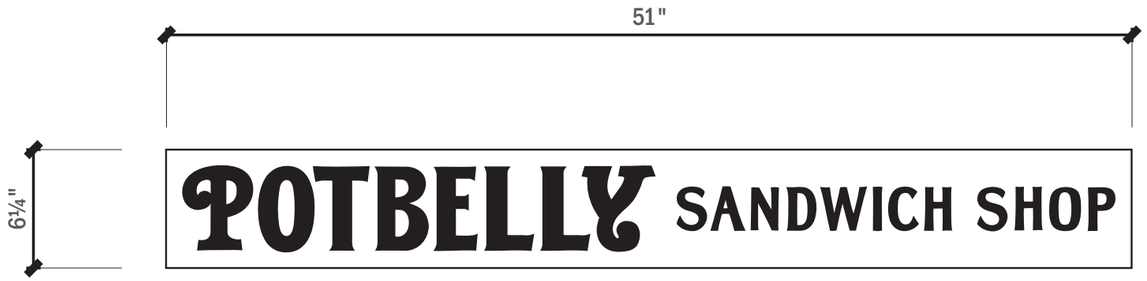

New White Lexan faces
manufacture and install first
surface applied Translucent
Film Gerber 230-22 Matte Black

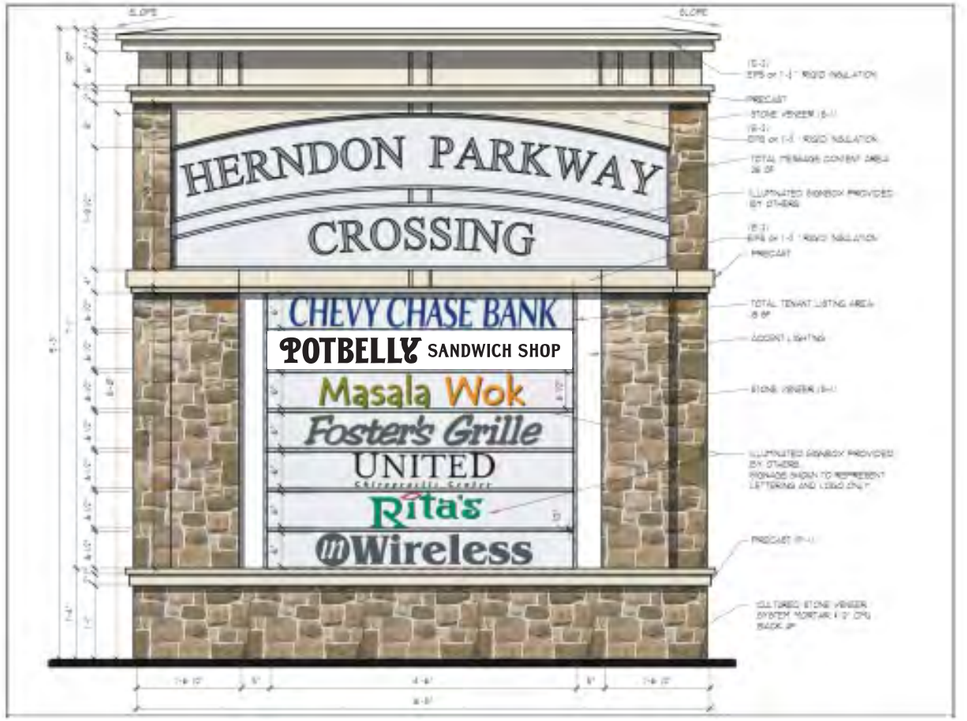

Replacement Face Elevation

Scale: 1½"=1'-0"

Placement

Monument Elevation - South

Monument Elevation - North

NATIONAL AWNING & SIGN

Design No.:	19-0024r6
Date:	May 10, 2019
Sheet:	6 of 7
Location:	905 Herndon Pkwy
City/State:	Herndon, VA 20170

Contact Information:
Salesman: Todd Hefner
Designer: Trent Schultz
P:817.625.4323 F:817.625.2123
www.awningandsign.com

Revisions:
R

This sign is intended to be installed in accordance with the requirements of article 600 of the National Electrical Code and/or other applicable local codes. This includes proper grounding and bonding of sign.

National Awning & Sign, LLC. does not accept responsibility for obtaining accurate code information for sign size allowance. This document is the property of **National Awning & Sign, LLC** and may not be copied or distributed w/o expressed written consent.

HERNDON PARKWAY, INVESTORS LLC.
DB 12598 PG 2086
ZONE: CO
USE: LOW RISE OFFICE

VCS 1983 – NORTH ZONE

PROP. FUTURE VDOT ROAD IMPROVEMENTS (PER VDOT PLAN #U000-235-V09)

PROP. FUTURE VDOT WALK IMPROVEMENTS

N70°44'16"E 34.98'

S79°51'29"E 23.42'

N28°41'09"E 265.95'

INTERPLANT STREET TREES WITH EXISTING SHRUBS

PROP. BUS BENCH FOR FAIRFAX CONNECTOR (PROP. BENCH TO MATCH EX. BENCH ON ELDEN ST.)

EX. BUS STOP

S33°27'54"E 121.26'

5' WALK

6' PAINTED CROSSWALK

5' WALK

PROP. LIGHT POLE (SEE SHEET 20A)

TIE PROP. CURB INTO EXISTING

PROP. LIGHT POLE (SEE SHEET 20A)

PROP. LIGHT POLE (SEE SHEET 20A)

EX. SHRUBS

EX. SHRUBS

EX. SHRUBS

1 STORY MASONRY BANK
1201 FF = 396.0

MODIFIED EXISTING RETAINING WALL

PROP. 5' WALK

8'-5"X9'-4" MONUMENT SIGN

(1)GB

TREE PROTECTION

EX. DECIDUOUS TREES

TIE PROP. CURB INTO EXISTING

EX. FLOWERING TREES

LIMITS OF PROP. ASPHALT REPLACEMENT

PROP. LIGHT POLE (SEE SHEET 20A)

(1)GB

(21)LI

PROP. LIGHT POLE (SEE SHEET 20A)

PROPOSED 4' LANDSCAPE STRIP

26"SQ., 40"H."PRESIDIO" LITTER RECEPTACLE

4'-8"X8'-6" BENCH/PLANTER

PROPOSED PLANTING AS PER GDP

CL6-AA 12'-8" LAMPPOST W/DUEL BANNER POLES & DEFUSED GLOBE.

4'-8"X8'-6" BENCH/PLANTER

PROPOSED PLANTING AS PER GDP

26"SQ., 40"H."PRESIDIO" LITTER RECEPTACLE

PROPOSED 4' LANDSCAPE STRIP

PROP. 4' LANDSCAPE STRIP

(2) PROP. VAN ACCESS H-CAP SIGNS

A

B

C

4' CONC. WALK

PROP. 5' LANDSCAPE STRIP

PROP. 5' CONCRETE WALK

PROP. CG-12

PROP. CANOPY OVERHEAD (SEE ARCH. PLANS)

PROP. BRICK PATIO (SEE ARCH. PLANS)

PROPOSED RETAIL/RESTAURANT BUILDING 14,200 S.F.

FF ELEV.=393.80
BLDG. HT.=45 FT.

UNIT G 2,400 S.F.

UNIT F 3,600 S.F.

UNIT E 1,200 S.F.

UNIT D 1,200 S.F.

UNIT B 4,400 S.F.

UNIT A 2,400 S.F.

PROP. 4' LANDSCAPE STRIP

PROP. H-CAP SIGN

PROP. CG-12

PROP. H-CAP SIGN

PROP. 5' LANDSCAPE STRIP

PROP. BIKE RACK

200 SF UTILITY ROOM (NON-LEASABLE AREA)

TREE PROTECTION

FDC SEE CIVIL

(12)ICH

PROPOSED DECIDUOUS TREE. SEE GDP (PG. 16 & 19)

(26)IGS

PROP. 10' x 13' TRASH ENCLOSURE (TO BE CONSTRUCTED PER TOWN STANDARDS

PROP. 17' x 25' LOADING SPACE

4' CONC. WALK

TIE PROP. WOOD FENCE TO PROP. BRICK WALL

PROP. 6' WOOD FENCE

N61°16'49"W 461.50'

PROP. 7' H. BRICK WALL EXTENSION

PROP. 8' WING WALL

N 7,035,239.9595
E 11,795,833.8326

1 SITE plan
3/32" = 1'-0"

PARKING AREA LANDSCAPING REQUIREMENTS

TOTAL PARKING SPACES PROVIDED:	136
DEC. TREES REQUIRED (1 PER 8 SPACES):	17
DECIDUOUS TREES PROVIDED:	17
EXISTING DECIDUOUS TREES:	2
PROPOSED DECIDUOUS TREES:	15

OPEN SPACE REQUIREMENT

TOTAL SITE AREA:	110,693 SF
OPEN SPACE REQUIRED:	25%, OR 27,674 SF
OPEN SPACE PROVIDED:	25%, OR 127,775 SF (NOT INCLUDING PATIO AREA)

Revisions

#	Date	
	05.13.06	SHELL PERMIT SET
	06.01.06	FIRE MARSHAL REVIEW
	02.14.07	WHITE BOX PERMIT SET (F.M. REVIEW)
	02.26.07	WB TENANT REVISIONS-UNITED WELLNESS
	07.03.07	CONSTRUCTION SET

Bignell Watkins Hasser
ARCHITECTS P.A.

Tyson's Corner, Virginia
Telephone – 703.288.3320
Fax – 703.288.4211

Annapolis, Maryland
Telephone – 410.224.2727
Fax – 410.224.4443

These drawings are the property of the Architect, Bignell Watkins Hasser Architects P.A. Unauthorized reproduction for any purpose is an infringement upon copyright laws. Violators will be subject to prosecution by fullest extent of the law.

Written dimensions on these drawings shall have precedence over scale dimensions. Contractors shall verify and be responsible for all dimensions and conditions on the job and this office must be notified of any variation from the dimensions and conditions shown by these drawings.

Client:
J DONEGAN COMPANY

Location:
FAIRFAX COUNTY

Project:
THE SHOPS AT HERNDON PARKWAY

SITE PLAN

Drawn by: C.G.

Project No.: 04014.01

Date: 05.13.06

A-0.1

ARCHITECTURAL REVIEW BOARD STANDARDS FOR DESIGN REVIEW
Taken from ARB Charter – Chapter 58 (Planning) of Herndon Town Code (2000)

DIVISION 4. STANDARDS* _____
***Charter references:** Standards and purpose, § 7.4:1(c). _____

Sec. 58-96. Design criteria.
The board of architectural review and, on appeal, the town council shall use the following standards and criteria in considering applications filed under this article:

(1) Whether or not the proposed architectural design is suitable for a good suburban community in terms of external architectural features, including signs subject to public view, general design and arrangement, texture, color, line, mass, dimension, material and lighting.

(2) Whether or not the proposed structure, building or improvement is compatible with existing well-designed structures, acceptable to the board, in the vicinity and in the town as a whole.

(3) Whether or not, and to what extent, the proposed structure, building or improvement would promote the general welfare and protect the public health, safety and morals by tending to maintain or augment the town's tax base as a whole, generating business activity, maintaining and creating employment opportunity, preserving historical sites and structures and making the town a more attractive and desirable place in which to live.

(4) Whether or not proposed freestanding buildings use the same or architecturally harmonious materials, color, texture and treatment for all exterior walls; and in the case of partially freestanding buildings, whether or not the same or architecturally harmonious materials, color, texture and treatment are used on all portions of all exterior walls exposed to public view.

(5) Whether or not the combination of architectural elements proposed for a structure, building or improvement, in terms of design, line, mass, dimension, color, material, texture, lighting, landscaping and roofline and height conform to accepted architectural principles for permanent buildings as contrasted with engineering standards designed to satisfy safety requirements only; and exhibit external characteristics of demonstrated architecture and aesthetic durability.

(6) Whether or not, in terms of design, material, texture, color, lighting, landscaping, dimension, line, mass or roof line and height, the proposed structure, building or improvement is designed to serve primarily as an advertisement or commercial display, exhibits exterior characteristics likely to deteriorate rapidly, would be of temporary or shortterm architectural or aesthetic acceptability, would be plainly offensive to human sensibilities or would otherwise constitute a reasonable foreseeable detriment to the community.

(Code 1992, § 4-16)